W50

Three-Phase Electric Motor

TECHNICAL CATALOG
NEMA MARKET

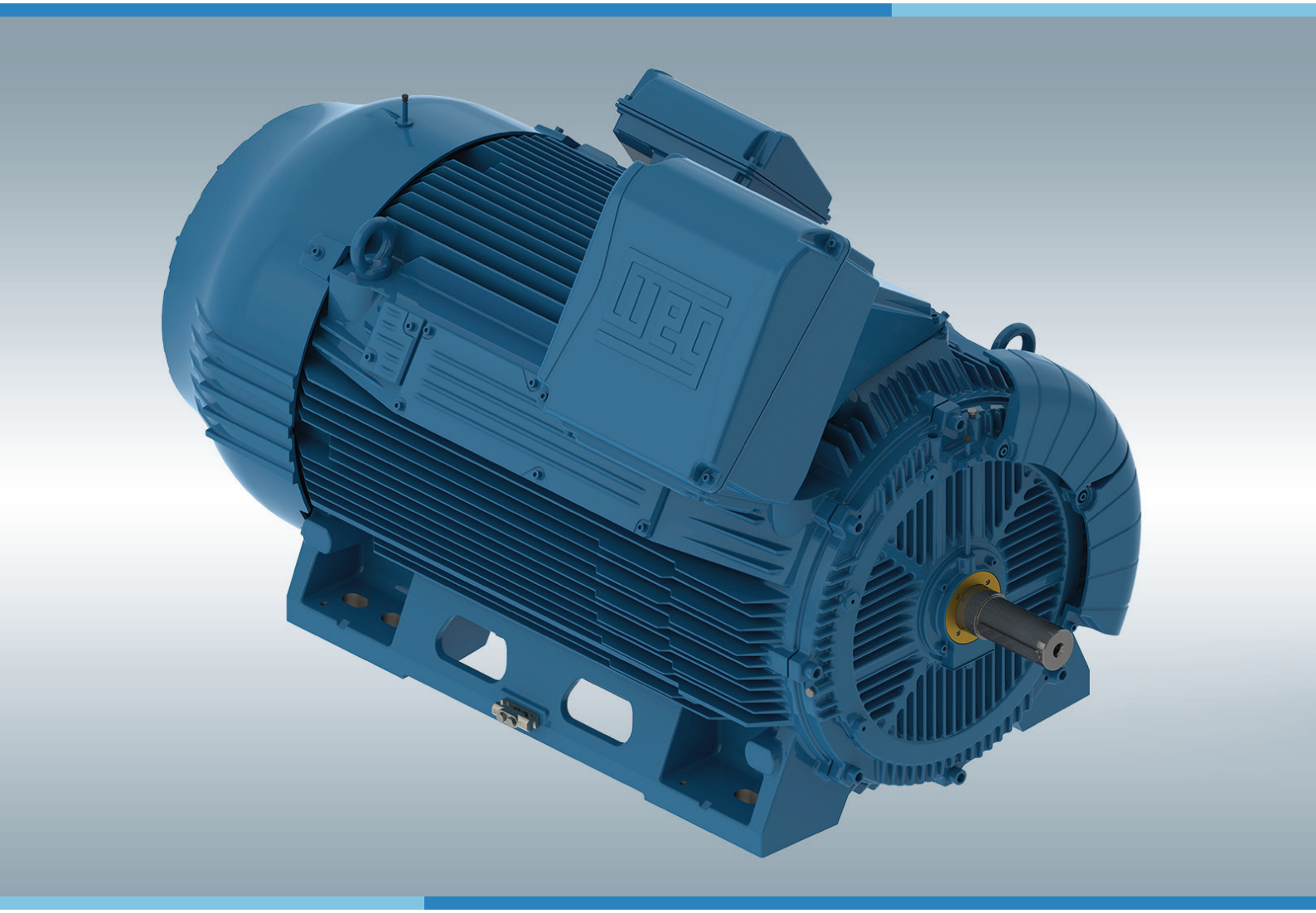

Motors | Automation | Energy | Transmission & Distribution | Coatings

W50 - The Generation of WEG Motors for Heavy Duty Applications

The W50 motor platform is the most modern option for applications that require high performance and reliability.

The scenario of increasing demand for more compact and efficient electric motors creates the need to develop products with higher performance, quality, reliability and that exceed the requirements of customers. It is with this concern that WEG introduces its line of motors for heavy duty applications: the W50.
The W50 motor offers excellent performance and complies with the strictest criteria of efficiency and safety.
Its design was developed using a series of sophisticated computational tools for electromagnetic, structural and thermal analysis and optimization, resulting in a compact, and robust product with high performance. Its frame ensures great mechanical strength to the motor and its fins provides great heat dissipation, which results in longer lifetime and higher levels of energy efficiency.
The W50 platform also includes optimizations in the supply chain in order to reduce waste and CO_2 emission rates, reinforcing the WEG group concern with the environment.

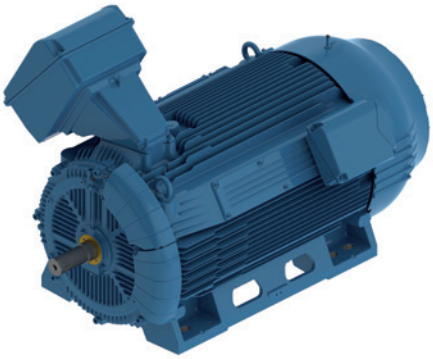

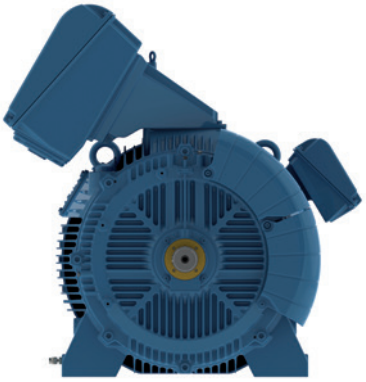

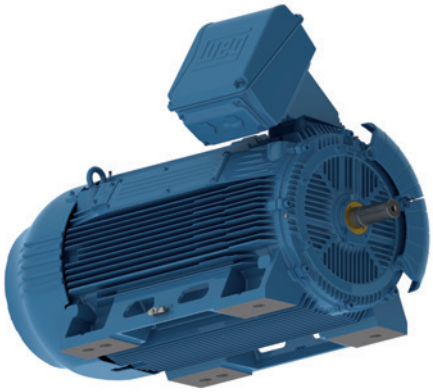

Main Features and Benefits of the W50 Motors

- Compact design
- Modular construction
- Low vibration levels
- High thermal efficiency
- High-energy efficiency
- High mechanical strength
- High performance in the most demanding operating conditions
- Low starting current
- Designed for operation with frequency inverter

Visual Index

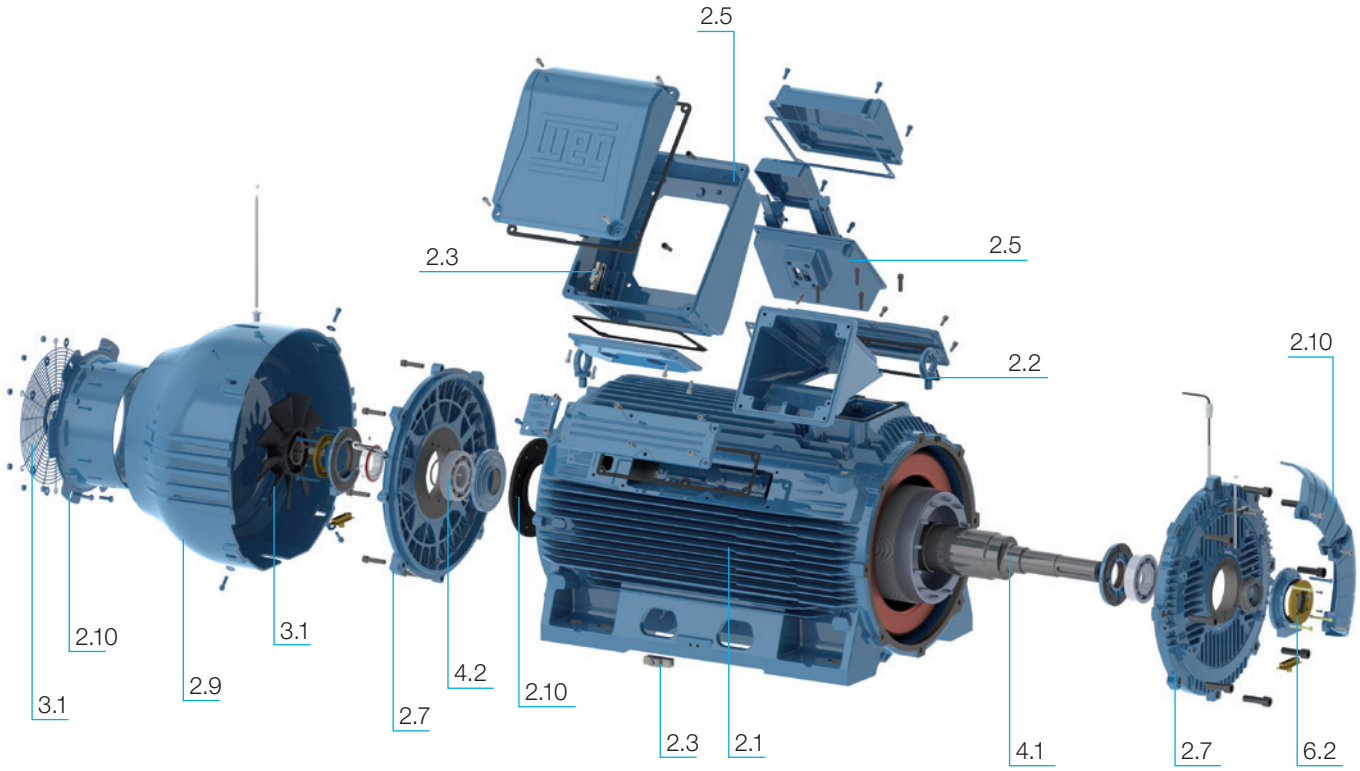

Item	Component	Page
2.10	Air baffle	10
6.2	Bearing sealing	20
2.7	DE-endshield	10
4.1	Shaft	14
2.2	Eyebolts	6
2.5	Accessory terminal box	9
2.1	Frame	6
2.3	Grounding Terminals	8
2.5	Main terminal box	8
3.1	Fan	12
4.2	Bearing	14
2.7	NDE-endshield	10
2.3	Earth terminal in the terminal box	8
3.1	Fan	12
2.9	Fan cover	10
2.10	Internal air baffle	12
3.1	Round steel screen	12

Table 1 - Visual index

Table of Contents

1. Standards 6
2. Construction Details 6
2.1 Frame 6
2.2 Eyebolts 6
2.3 Grounding Terminals 7
2.4 Grounding Brush 7
2.5 Terminal Box 8
2.5.1 Main Terminal Box 8
2.5.2 Accessory Terminal Box 8
2.6 Stator Winding 8
2.7 Endshields 9
2.8 Drains 9
2.9 Fan Cover 9
2.10 Air Baffle 10
2.11 Nameplate 10
2.11.1 Main Nameplate 10
2.11.2 Additional Nameplate 11
2.11.3 Warning Plate 11
3. Ventilation / Noise / Vibration 11
3.1 Ventilation System 11
3.1.1 Fans 11
3.2 Noise Level 12
3.3 Vibration 12
3.3.1 Shaft Relative Vibration Limits 15
4. Shaft / Bearings / Stresses 13
4.1 Shaft 13
4.2 Bearings 13
4.2.1 Shaft Locking Device 14
4.2.2 Insulated endshield 14
4.2.3 Lubrication 14
4.3 Maximum Radial and Axial Loads 15
4.3.1 Radial Loads 15
4.3.2 Axial Loads 16
5. Mounting 16
6. Degree of Protection / Bearing Sealing / Painting 17
6.1 Degree of Protection 17
6.2 Bearing Sealing 17
6.3 Painting 17
6.3.1 Internal Anti Corrosive Painting 17
7. Voltage / Frequency 17
8. Environment 18
9. Operation Characteristics 18
9.1 Thermal Protection 18
9.2 Operation with Frequency Inverter 18
9.2.1 Influence of the Inverter on Temperature Rise of the Motor 18
9.2.2 Common-Mode Voltages 19
10. Installation Characteristics 20
10.1 Strength and Mass of the Motor Mechanical Support System (MSS) 20
10.2 Dimensional Control 20
11. Special Accessories 20
11.1 Encoder 20
11.2 Protection Against Voltage Surge 20
11.3 Leveling Screw (Vertical Jacking Screws) 21
11.4 Non-Reverse Ratchet 21
11.5 Thermometer 21
11.6 Interchangeability Solutions 21
11.7 Automatic Lubricator 21
12. Construction Features 22
13. Optional Features 23
14. Electrical Data 26
14.1 W50 - Low Voltage 26
14.2 W50 - High Voltage - 1.2 kV to 5.0 kV 28
14.3 W50 - High Voltage - 5.1 kV to 6.6 kV 31
15. Mechanical Data 33
15.1 Frames 5009/10 to 7008/09 33
15.2 Flange “D” 34
15.3 Flange “C” 34
15.4 External Motor Dimensions with Steel Plate Terminal Box 34
15.5 External Motor Dimensions with Sleeve Bearing 35
15.6 External Motor Dimensions with Forced Ventilation 35
15.7 Drip Cover Height 35
16. Terminal Boxes 36
16.1 Cast Iron Terminal Boxes 36
16.2 Steel Plate Terminal Boxes 38
17. Packaging 45
18. Spare Parts 46

1. Standards

The W50 motors meet the requirements and regulations of the current versions of the following standards:

Standard	Title
NEMA MG 1	Motors and Generators
UL 1004-1	Rotating Electrical Machines - General Requirements
CSA C 22.2 Nº 100	Motors and Generators

Table 2 - Standards observed in the motor design.

2. Construction Details

The information contained herein refers to the standard mounting features and the most common variants of the W50 line. Motors for special and/or customized application are also available on request. Please, contact the nearest WEG office.

2.1 Frame

Produced in cast iron FC-200, the frames of the W50 motors withstand high mechanical impacts, ensure maximum heat dissipation and high mechanical strength and reduce mechanical vibration even when transmitted by external sources. In addition, fins are distributed to have a greater heat exchange area in the frontal area, which contributes to a uniform temperature distribution throughout the whole motor and reduces the DE bearing temperature. Thus, this unique fin distribution design ensures excellent thermal performance of the motor.

Figure 1 - Frame of the W50 motor.

The motor has solid and integrated cast feet which provide greater strength (see Figure 2).

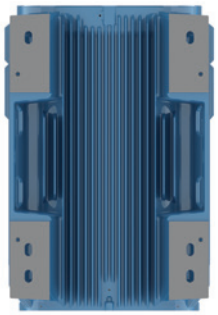

Figure 2 - Solid integrated cast feet ensuring high mechanical strength.

2.2 Eyebolts

To facilitate lifting to the different mounting positions, the W50 motors have multiple points for attaching eyebolts.

- Motors with feet:

Standard: five points for attaching eyebolts.
Optional: nine points for attaching eyebolts (the five standard points plus four additional points - two on each motor foot).

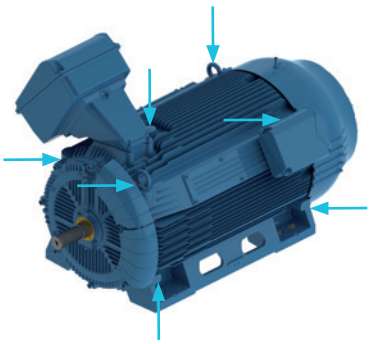

Figure 3 - Eye-bolt fixing points for motors with feet.

Motors with two terminal boxes are provided with three main points for lifting eyebolts (two on the back and one in the center).

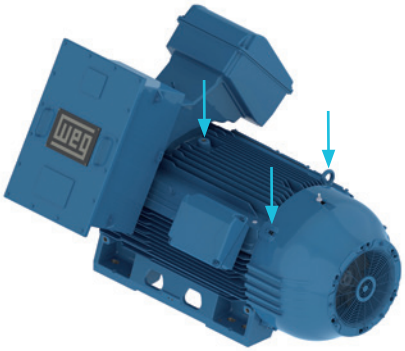

Figure 4 - Eyebolt fixing points for lifting motors with two terminal boxes.

- Footless motor:

Standard: nine eyebolts (five at top side and four at bottom side).
Optional: nine standard eyebolt fixing points plus and one additional eyebolt fixing point located at the bottom side center.

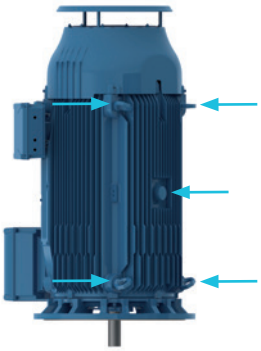

Figure 5 - Eyebolt fixing points for lifting footless motors (at the bottom side).

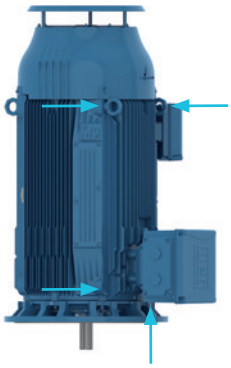

Figure 6 - Eyebolt fixing points for lifting footless motors (at the top side).

Note:

- Horizontal motors:

For lifting of horizontal mounted motors use all eyebolts simultaneously. For this procedure, there are two ways: vertical chains (see Figure 7) and inclined chains (see Figure 8).

Figure 7 - Lifting with vertical chains.

For lifting motors with inclined chains, the maximum inclination angle of the chain during the lifting process should not exceed 30° in relation to the vertical axis. WEG recommend to use a spreader bar for maintaining the lifting elements (chain or ropes) in vertical position and thus preventing damage to the motor surface.

Figure 8 - Lifting with inclined chains.

- Vertical motors:

For lifting of vertical mounted motors always use the eyebolts mounted at the top side of the motor, diametrically opposite, considering the mounting position (see Figure 9).
In these cases, it is also necessary to use a spreader bar.

Figure 9 - Lifting of vertical motors.

- Motors with two main terminal boxes:

For lifting of motors with two terminal boxes, use always three eyebolts as shown in Figure 10.

Figure 10 - Lifting of motors with two main terminal boxes.

2.3 Grounding Terminals

The W50 motors are fitted with grounding terminals on the frame (see Figure 11) and inside the main terminal box. These terminals can be positioned on the right or left side of the frame and have cross-section from 25 to 185 mm^2.

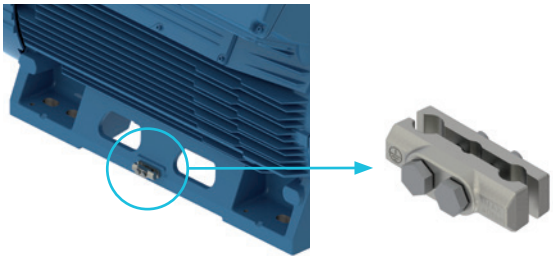

Figure 11 - Detail of the standard grounding terminal for the main terminal box and frame.

2.4 Grounding Brush

The motors can also be supplied with a grounding brush on the drive end as an optional item. For operation with variable frequency inverter, W50 motors are always fitted with shaft grounding brush at motor drive end (see Figure 12) and insulated non-drive end bearing to avoid current flow along the motor shaft, across the bearing and return to the frame thus preventing premature bearing wear and failure due to electric currents flowing through them.

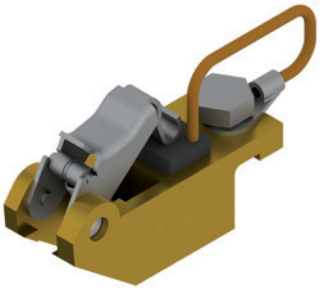

Figure 12 - Shaft grounding brush for bearing.

The motors can optionally be supplied with an AEGIS shaft grounding ring (see Figure 13) installed on the inner bearing cap. A version designed for external use can be supplied on request.

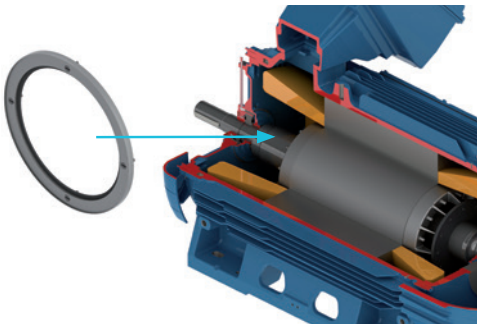

Figure 13 - AEGIS grounding ring.

Note:

- The incorrect specification and/or inadequate use of the grounding devices can cause serious damage to the machine and people involved in the operation of the motor. Before powering up the motor, ensure that it is properly grounded and that all grounding components are in perfect operating conditions.

2.5 Terminal Box

The W50 line has specific terminal boxes for motor power cables and accessory cable connections.

2.5.1 Main Terminal Box

It can be manufactured in cast iron FC-200, the same material used in the frame and endshields, or steel plate, and due to its mounting it can be rotated in steps of 90°. Main terminal box has been designed for easier and ergonomically handling during cable connection procedures. The terminal box is mounted on a support on the top of the motor, allowing easy change of the terminal box position (see Figure 14).

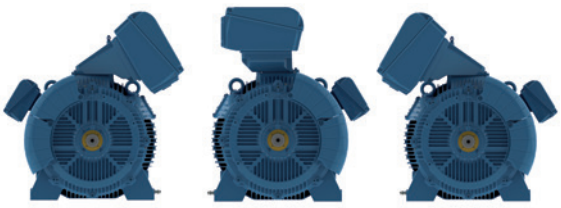

Figure 14 - Changing possibilities of the terminal box position.

Low voltage motors are supplied with six cables connected to a terminal block, allowing direct online or star/delta starting. High voltage motors are supplied with three connection bolts.

The terminal box for high voltage motors is provided with a pressure relief device that ensures component integrity and user safety in case of short circuit. In case of activation of the pressure relief device, please contact WEG authorized servicing center. For safety reasons, this device must never be reassembled and never operate the motor without this safety device installed.

On request, the high voltage motors can also be supplied with an additional terminal box mounted on the opposite side of the main terminal box to enclosure the star point (see Figure 15).

High voltage motors can be supplied with a surge arrester and/or surge capacitors assembled in specific terminal box (see Section 11. Special accessories).

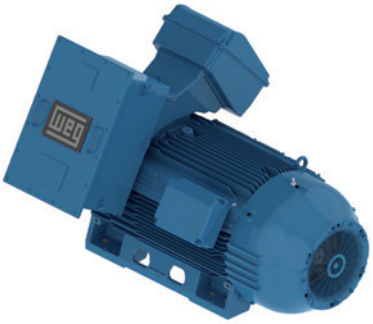

Figure 15 - Motor with access to neutral connection in a separated terminal box.

2.5.2 Accessory Terminal Box

The W50 motors have a specific terminal box for connecting accessories. This box is also manufactured in cast iron FC-200 and comprises two compartments (see Figure 16).

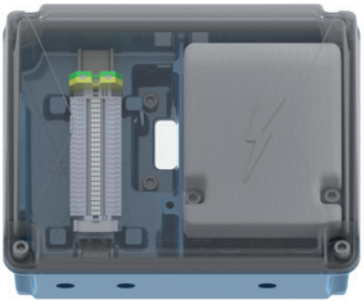

Figure 16 - Additional terminal box.

2.6 Stator Winding

The stator windings of the W50 motors, regardless of voltage, are supplied with Class F insulation system and Class B temperature rise (80 K). Optionally, the motors can be supplied with Class H insulation system and Class B temperature rise (80 K). Other insulation system combinations can be supplied on request. To monitor the motor heating, the windings are fitted with two sets of Pt-100 and with a set of space heaters in order to prevent water condensation inside the motor. The space heaters are mounted in the air ducts on both sides of the motor for easy maintenance.

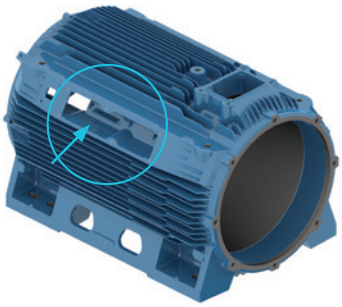

Figure 17 - Air ducts of the frame for air flow.

Since the lifetime of the motor is influenced by the temperature at which it operates, thus it is important to constantly monitor the winding temperature.

Note:

- The space heaters must always be switched on when the motor is out of service for long periods and switched off when the motor is running, thereby preventing the deterioration of motor components and possible overheating.

The W50 High Voltage insulation systems are designed with mica tape layers and impregnated with epoxy resin through Vacuum Pressure Impregnation -VPI process and carefully manufactured and tested at factory thus ensuring a end product with high levels of reliability, preventing contamination of the impregnation varnish and ensuring void-free impregnation of windings. For motors that operate with a non sine wave frequency inverter, insulation systems are reinforced to prevent accelerated aging of insulation (available on request).

2.7 Endshields

To improve heat dissipation and ensure lower operating temperatures on the bearing, the DE- endshield is provided with fins uniformly distributed to ensure higher heat exchange efficiency of the bearings and motor. The endshields are manufactured in cast iron FC-200 and fastened with 8 bolts to ensure maximum rigidity (see Figure 18).

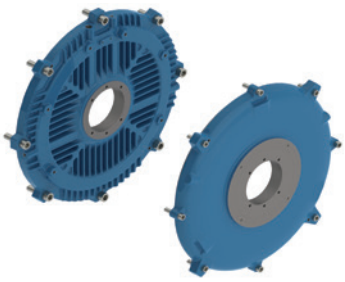

Figure 18 - D-endshield (left) and ND-endshield (right).

Depending on its mounting, the W50 can be provided with flange type “D” and “C”, as shown in Figure 19.

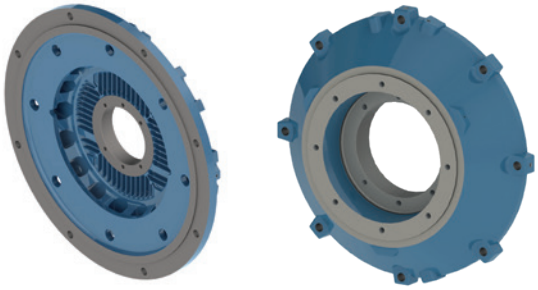

Figure 19 - D-endshields - Flange “D” and Flange “C”.

2.8 Drains

W50 has automatic drain plugs with degree of protection IP66 (see figure 20) which do not require human intervention to open the plug and avoid accumulation of condensed liquids into the motor.

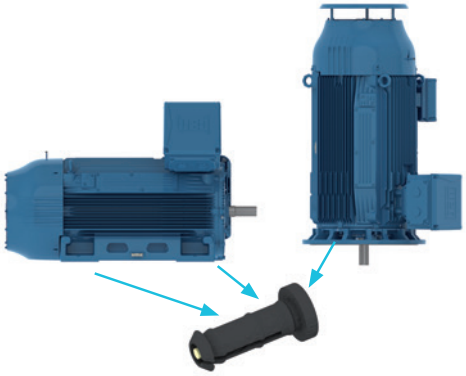

Figure 20 - Positions of automatic drains on the motors of the W50 line mounted in the horizontal and vertical position.

2.9 Fan Cover

The fan covers are built in cast iron FC-200 (see Figure 21), have an aerodynamic design, features high mechanical resistance to loads and impacts, which allows their application in environments with risk of mechanical impact up to 5 Joules (IK08 according to standard IEC 62262).
For motors with sleeve bearings, the fan cover is made of steel plate, with the same features as the cast iron version.

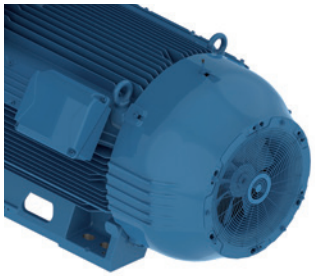

Figure 21 - Fan cover manufactured in cast iron FC-200.

Thanks to the new baffle design along with the new arrangement of the frame fins, the W50 ensures optimal air flow and air speed over the frame. The shape of the baffle ensures increased efficiency of the ventilation system, which improves the thermal performance and efficiency of the motor. The unique mounting system of the grid and internal baffle (see Figure 22) ensures low noise levels - even lower than noise levels stablished by the standardards.

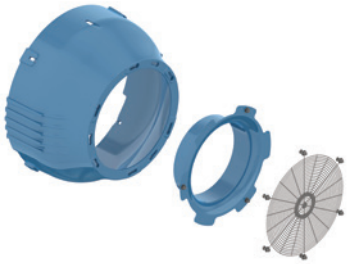

Figure 22 - Mounting system that ensures low noise levels.

2.10 Air Baffle

The W50 also has a pair of air baffles made of cast iron on the DE bearing. It was designed in order to guarantee a continuous and uniform airflow over the bearing housing, which significantly lowers its temperature and consequently increases relubrication intervals and bearing life (see Figure 23). Motors with sleeve bearings are supplied with two pairs of air baffles (see Figure 24).

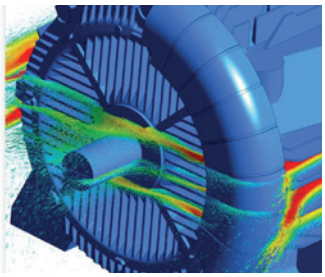

Figure 23 - Representation of the air flow over the DE bearing.

Figure 24 - Two pairs of air baffles for motors with sleeve bearings.

It is noteworthy to mention that for proper motor operation air inlets for motor ventilation are not blocked and that the space surrounding the equipment is enough to keep the air temperature at the baffle inlet below the maximum temperature indicated on the motor main nameplate. For motors installed outdoors ensure that ventilation openings are not blocked and a minimum clearance of 1/4 of the baffle diameter is maintained from the walls to ensure free airflow for the ventilation system. For indoor installations, besides the minimum distance from walls, the air temperature must be checked at the air inlet of the ventilation system to prevent motor overheating.

Motors installed outdoors or in vertical position require the use of additional shelter to protect them against the ingress of rainwater and/or solid particles, for instance the use of a drip cover.

Note:

- The mounting features of the fan cover must not be changed, because they are designed to ensure maximum efficiency of the fans.

2.11 Nameplate

The motors can be supplied with three types of nameplate: main, additional and warning nameplate. All nameplates are made of AISI 304 stainless steel and the main and additional plates are laser engraved. Figure 25 shows the location of the nameplates on the W50 motor.

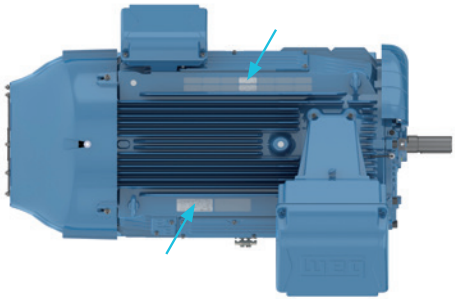

Figure 25 - Location of the nameplates on the electric motor.

2.11.1 Main Nameplate

The main nameplate provides information describing the mounting features and motor performance. It also provides the motor serial number and its year of manufacture. Figure 26 shows the layout of the nameplate on the W50 motor.

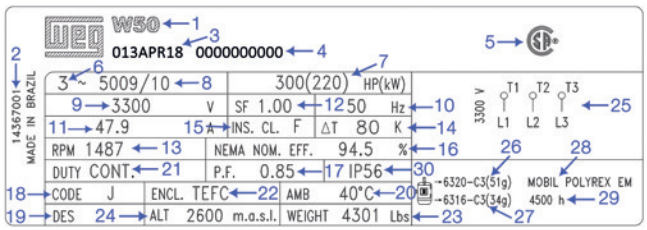

Figure 26 - Main nameplate of the motor.

1	Motor line
2	Motor code
3	Manufacturing date
4	Serial number
5	Certifications
6	Number of phases
7	Output power
8	Frame model
9	Rated voltage
10	Frequency
11	Rated current
12	Duty factor
13	Speed
14	Temperature rise of the windings
15	Insulation class
16	Efficiency
17	Power factor
18	NEMA code letters for locked rotor kVA
19	Design
20	Ambient temperature
21	Duty cicle
22	Enclosure type
23	Weight
24	Altitude
25	Wiring diagram
26	DE bearing and grease quantity
27	NDE bearing and grease quantity
28	Grease type used on the bearings
29	Bearing´s Relubrication interval (in hours)
30	Degree of protection

Table 3 - Description of the items on the motor main nameplate.

2.11.2 Additional Nameplate

To indicate the available accessories, the W50 motors are supplied with additional nameplates that contain informations on temperature sensors (see Figures 27 and 28), space heaters (see Figure 29), and other accessories supplied on customer request. Also, if required, these nameplates can be used to show the TAG codes specific to the motor.

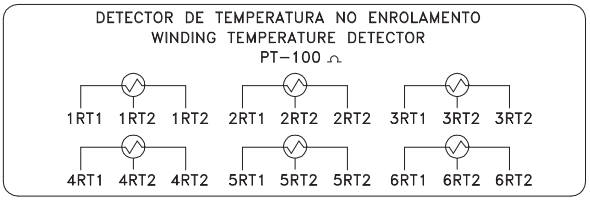

Figure 27 - Additional nameplate for winding temperature detectors (Pt-100).

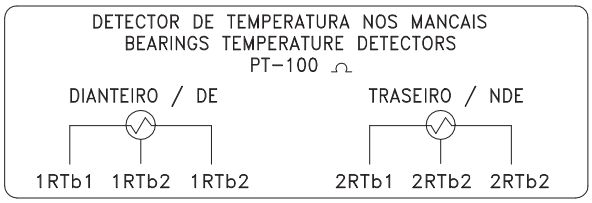

Figure 28 - Additional nameplate of the temperature sensor (Pt-100) for the bearings.

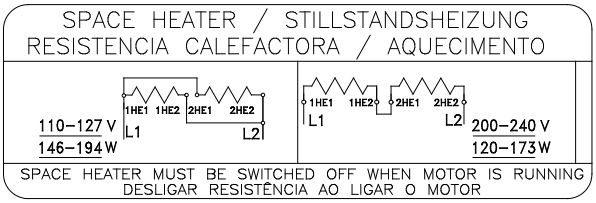

Figure 29 - Additional nameplate for the space heater.

Note:

- When motor is fitted with dual voltage space heaters, WEG supplies the motor connection set for 127 V. If required to connect to 220 V, the wiring diagram must be changed as shown on the additional nameplate of the space heater.

2.11.3 Warning Plate

Motors with rated voltage above 1 kV are supplied with a warning nameplate (see Figure 30), indicating the presence of high voltage on the motor. Never touch any energized circuits or rotating parts of the motor. Maintenance, installation and any interventions must be performed by qualified staff with appropriate tools only. For more details contact WEG technical support.

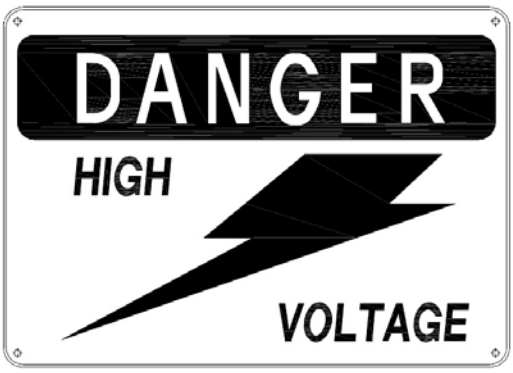

Figure 30 - Warning plate for motors above 1 kV.

3. Ventilation / Noise / Vibration

3.1 Ventilation System

The motors of the W50 line comply with the specification of Totally enclosed fan cooled motors (TEFC - IC-411) according to NEMA MG-1 Part 6.
The optional version with forced ventilation (IC 416) can also be provided. On request, WEG can supply non-ventilated (TENV) and Air Over (TEAO) versions. Further information on the IC 416 option can be found in item 9.2 Operation with Frequency Inverter.

3.1.1 Fans

With an innovative ventilation system, W50 motors have a uniform distribution of internal temperature. This system produces a pressure difference between the drive end and non-drive end of the motor, resulting in an air flow through the rotor cooling channels (see Figure 31). The internal ventilation system results in a homogeneous temperature distribution along the stator, and also helps to reduce the bearing temperature levels.
The internal ventilation system adopted for the W50 motors is simple and compact and provides the required air flow while increasing the cooling efficiency and reducing the vibration levels.

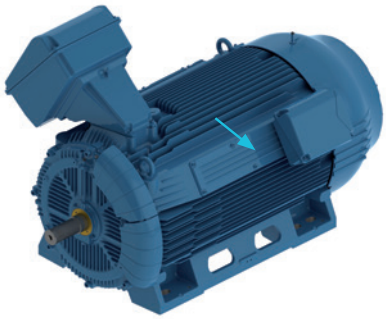

Figure 31 - Airflow channels in the motor frame.

The W50 2P motors are fitted with axial fans (figure 32) and with 4 or more poles are fitted with radial fans, ensuring low noise levels and high ventilation efficiency.
Made of cast iron FC-200, the fans are unidirectional for 2-pole motors and bidirectional for four or more poles.
For 2 pole motors, the direction of rotation must be specified by the customer. Aluminum fans can also be supplied on request.

Figure 32 - Radial fan.

Figure 33 - Axial fan.

3.2 Noise Level

The performance of the W50 motors with respect to their noise levels is represented in the table below. The data refers to motors operating at 50 Hz and 60 Hz with fan covers made of cast iron. For polarities over eight poles it is necessary to refer to WEG.

Frame	Sound pressure level dB(A) 50 Hz				Sound pressure level dB(A) 60 Hz			
	2P	4P	6P	8P	2P	4P	6P	8P
5009/10	75	75	73	71	79	79	77	75
5809/10	78	78			82	82		
6806/07 6808/09			77	75			81	79
7006/07 7008/09								

Table 4 - Sound pressure level for motors at 50 Hz and 60 Hz with fan cover made of cast iron.

The sound pressure levels shown in the tables above are valid for motors operating with no load and sine-wave power supply and are subjected to a tolerance of ± 3 dB(A). Under load, NEMA MG 1 specifies a sound pressure level increase according to Table 5.

Height of the shaft end - H (in)	2P	4P	6P	8P
H = 12.402	2	3	5	6
13,976 ≤ H		2	4	5

Table 5 - Maximum expected increase of the sound pressure level for motors operated with load.

Note:

- The sound pressure level increase for motors driven by frequency inverter that depends on the switching frequency of the inverter, may reach up to maximum 11 dB (A) according to IEC 60034-17 and IEC 60034-25.

3.3 Vibration

The vibration of an electrical machine is directly related to its installation conditions. For this reason, it is extremely important that the customer ensures a sturdy base and the required dimensional tolerances.
To prevent equipment damage, vibration levels should be monitored regularly and any abnormal behavior must be immediately reported to the nearest authorized repair shop and/or to WEG. Motors with rolling bearings are highly sensitive to vibrations, and can suffer premature wear if exposed to vibrations above the acceptable limits.
It is recommended that vibration measurements be always performed before and after any maintenance or intervention on the equipment. Whenever possible, the vibrations generated only by the motor must be evaluated by no-load tests, following the procedures described in NEMA MG 1 Part 7.
According to Table 6, the limits of maximum vibration magnitude in displacement, velocity and acceleration defined by NEMA MG 1 Part 7 for motors operating at no-load are classified into vibration grade A and B.

Vibration grade	Mounting		Displacement (mils) (peak to peak)	Velocity (in/s) (peak)	Acceleration (in/s²) (peak)
A	Resilient		2.4	0.15	0.61
	Rigid		1.9	0.12	0.49
B	Resilient		1.6	0.10	0.41
	Rigid	2P, 4P and 6P			
		8P, 10P and 12P	1.3	0.08	0.33

Table 6 - Limits of maximum vibration magnitude in displacement, velocity and acceleration.

When no special vibration requirements are specified in the Purchase Order, motors will be supplied in conformance with vibration grade A, while motors in conformance with vibration grade B will be supplied only on request. All rotors of the W50 motors are dynamically balanced with a half key and, as standard, are designed to vibration grade A.
For vibration monitoring, the D-endshield of the W50 motors has three M8 threaded holes where vibration sensors can be fitted. Due to the air baffles, only two vibration sensors can be assembled on the D-endshield, one on the top and another on the opposite side of the air baffles. In case of changing the terminal box position (in example, to change the mounting from F1 to F2), the position of the air baffles and the threaded adapters for vibration monitoring should also be inverted. Optionally, these holes can be supplied with a threaded adapter for fitting the SPM vibration sensor (see Figure 34).

Figure 34 - SPM Sensors.

Figure 35 - Threaded adapter for vibration measurement.

The frames also have flat areas for mounting of vibration sensors at the motor non-drive end. On request, non-drive end shields can be supplied with threaded holes for sensor mounting. Figure below shows the measuring point locations (see Figure 36). On request, the vibration sensors can be supplied with the motor.

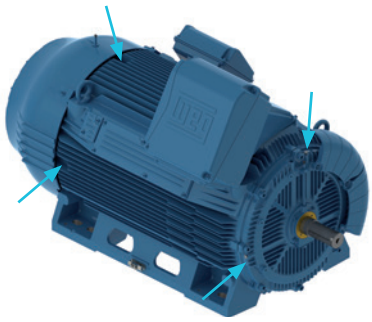

Figure 36 - Location of areas for vibration measuring points.

3.3.1 Shaft Relative Vibration Limits

For machines with sleeve bearings with speed over 1,200 rpm and at rated power over 1,000 kW, NEMA MG 1 Part 7 recommends relative shaft vibration measurements (see Table 7).
Sensor readings may be affected by mechanical and magnetic anomalies of the shaft, commonly referred to as runout.

Vibration grade	Speed range (rpm)	Max. displacement (mils) (peak to peak)	Max. combined mechanical and electrical run-out (mils)
A	> 1,800	2.6	0.65
	≤ 1,800	3.5	0.88
B	> 1,800	1.5	0.45
	≤ 1,800		

Table 7 - Maximum relative shaft displacement.

4. Shaft / Bearings / Stresses

4.1 Shaft

The shafts of the W50 motors comply with NEMA MG 1 and undergo several numerical analyses until reaching the final dimensioning. Among the evaluation steps are: calculation of fatigue considering the stress concentration, torsion, bending and traction-compression efforts, stress and deformation analysis, torsional strength and modal analysis. In order to facilitate the maintenance and the coupling of the loads, all motors have the shaft with threaded center hole.
The standard shaft material is AISI 4140 steel, and supplied with key type “a” according to ISO 2491. On request, WEG can also supply double-end shaft motors, shaft end with special dimensions, and shafts made of other materials. The dimensions for the shaft and key can be found in section 15. Mechanical Data.

4.2 Bearings

The standard motors are supplied with open ball bearings with C3 clearance and lubricated with grease. On request, motors with ball bearings can be supplied with C4 clearance.
All motors are supplied with Pt-100 temperature sensors in the windings as standard thus ensuring an efficient method for continuous temperature monitoring during operation.
Standard motors are supplied with taconite labyrinth seals or, as an option, they can be supplied with INPRO / SEAL or labyrinth with Teflon Seal. Figure 37 shows the bearing construction form.

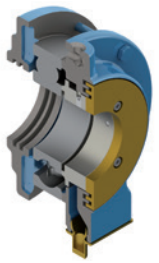

Figure 37 - Ball bearing.

The vertical motors, for normal thrust loads can be supplied with ball bearings or angular contact ball bearings at the drive side, considering frame size and speed. This bearing configuration ensures optimum operating conditions for the motor in different applications and also prevents possible coupling problem caused due to thermal expansion. The rated bearing lifetime, L10h, for direct coupling of the W50 line motors is 100,000 hours (40,000 hours on frame size 7008/09 2-pole) and for other operating conditions the bearing lifetime, L10h, is 40,000 hours. Different bearing lifetime L10h can be evaluated on request.
The rolling bearing lifetime depends on the type and size of the bearing, the radial and axial loads they are subject, the operating conditions, the speed and grease life. Thus, its lifetime is closely related to its correct use, maintenance and lubrication. When the recommended amount of grease and lubrication intervals are respected, the bearings can reach the lifetime values aforementioned.

Note:

- The bearing lifetime, L10h, in terms of operating hour, is the life that 90% of bearings is reached or even exceeded when motors are operated in compliance with the data provided in this catalog.

Table 8 lists the standard rolling bearings for different configurations of the W50 line.

	Frame	Number of poles	DE	NDE
Horizontal mounting	5009/10	2	6314 C3	6314 C3
		4 - 8	6320 C3	6316 C3
	5809/10	2	6314 C3	6314 C3
		4 - 8	6322 C3	6319 C3
	6806/07 and 6808/09	2	6218 C3	6218 C3
		4 - 8	6324 C3	6319 C3
	7006/07 and 7008/09	2	6220 C3	6220 C3
		4 - 8	6328 C3	6322 C3
Vertical mounting Normal thrust	5009/10 H/G	2	7314 C3	6314 C3
		4 - 8	6320 C3	6316 C3
	5809/10 J/H	2	7314 C3	6314 C3
		4 - 8	6322 C3	6319 C3
	6806/07 and 6808/09	2	7218 C3	6218 C3
		4 - 8	7324 C3	6319 C3
	7006/07 and 7008/09	2	7220 C3	6220 C3
		4 - 8	7328 C3	6322 C3

Table 8 - Standard rolling bearings per frame size.

Optionally, motors with horizontal mounting for applications with high radial loads can be supplied with roller bearings of the NU series, according to Table 9.

Frame	Number of poles	Rolling bearing DE
5009/10	4 - 8	NU320 C3
5809/10	4 - 8	NU322 C3
6806/07 and 6808/09	4 - 8	NU324 C3
7006/07 and 7008/09	4 - 8	NU328 C3

Table 9 - Optional roller bearings of the NU series.

The W50 motors can also be supplied with sleeve bearings with lateral flange and natural cooling (see Figure 38).
This option ensures lower maintenance and longer bearing life in non-heavy duty applications with direct coupling.
Depending on the customer requirements, other configurations can be supplied on request.

Figure 38 - Sleeve bearing.

Table 10 lists the standard bearings for motors with sleeve bearings.

	Frame	Number of poles	DE	NDE
Horizontal mounting with sleeve bearings	5009/10	2	9-80	9-80
		4 - 8	9-90	9-90
	5809/10	2	9-80	9-80
		4 - 8	9-100	9-100
	6806/07and 6808/09	2	9-80	9-80
		4 - 8	11-110	11-110
	7006/07 and 7008/09	2	9-80	9-80
		4 - 8	11-125	11-125

Table 10 - Standard bearings per frame for motors with sleeve bearing.

4.2.1 Shaft Locking Device

The W50 motors are fitted with a mechanical shaft locking device to prevent damage to the rotor and bearings during transportation (Figures 39, 40 and 41). This locking device should only be removed right before installation and stored in a safe location for future transportation of the motor.

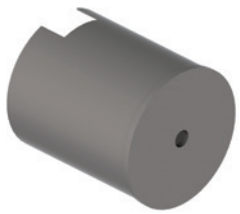

Figure 39 - Shaft locking device for motors with rolling bearing.

Figure 40 - Shaft locking device for motors with special bearing.

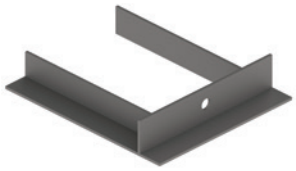

Figure 41 - Shaft locking device for motors with sleeve bearing.

4.2.2 Insulated endshield

In order to avoid bearing damage caused by electrical discharges generated inside the bearings, the W50 motors are fitted as standard with insulated NDE bearing (Figure 42). Currents flowing through the bearing have the potential of creating premature failure of theses bearings accelerating the degradation of the lubricant and of the bearing rolling elements.

For all motors driven by frequency inverter, the electrical insulation of the NDE bearing and grounding between shaft and frame through grounding brush at drive end is mandatory.

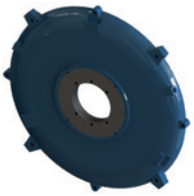

Figure 42 - Insulated ND endshield.

Horizontal motors with sleeve bearings, when required, both endshields may be supplied with insulation. Vertical motors with high thrust loads are also supplied with insulated DE bearing. For other configurations, contact WEG.

4.2.3 Lubrication

Bearing Lubrication

The W50 motors are fitted with a lubrication system with grease nipples on the DE and ND endshields, and a grease outlet drawer system for removing the old grease. The amount of grease and lubrication intervals are informed on the motor nameplate, and are also specified in Table 11.

	Frame	Number of poles	DE bearing	Grease (g)	50 Hz (h)	60 Hz (h)	NDE bearing	Grease (g)	50 Hz (h)	60 Hz (h)
Horizontal mounting - ball bearings	5009/10	2	6314	27	4,500	3,500	6314	27	4,500	3,500
		4 - 8	6320	50		4,500	6316	34		4,500
	5809/10	2	6314	27		3,500	6314	27		3,500
		4 - 8	6322	60		4,500	6319	45		4,500
	6806/07 and 6808/09	2	6218	24	3,800	2,500	6218	24	3,800	1,800
		4 - 8	6324	72	4,500	4,500	6319	45	4,500	4,500
	7006/07 and 7008/09	2	6220	31	3,000	2,000	6220	31	3,000	2,000
		4	6328	93	4,500	3,300	6322	60	4,500	4,500
		6 - 8				4,500				
		8		140						
Vertical mounting - ball bearings	5009/10	2	7314	27	2,500	1,700	6314	27	2,500	1,700
		4	6320	50	4,200	3,200	6316	34	4,500	4,500
		6 - 8			4,500	4,500				
		2	7314	27	2,500	1,700	6314	27	2,500	1,700
		4	6322	60	3,600	2,700	6319	45	4,500	3,600
		6 - 8			4,500	4,500				4,500
	6806/07 and 6808/09	2	7218	24	2,000	1,300	6218	24	2,000	1,300
		4	7324	72	3,200	2,300	6319	45	4,500	3,600
		6			4,500	4,300				4,500
		8				4,500				
	7006/07 and 7008/09	2	7220	31	1,500	1,000	6220	31	1,500	1,000
		4	7328	93	2,400	1,700	6322	60	3,500	2,700
		6			4,100	3,500			4,500	4,500
		8			4,500	4,500				
Horizontal mounting - roller bearings	5009/10	4	NU320	50	4,300	2,900	6316	34		
		6 -8			4,500	4,500				
	5809/10	4	NU322	60	3,500	2,200	6319	45		
		6 - 8			4,500	4,500				
	6806/07 and 6808/09	4	NU324	72	2,900	1,800				
		6 - 8			4,500	4,500				
	7006/07 and 7008/09	4	NU328	93	2,000	1,400	6322	60		
		6			4,500	3,200				
		8				4,500				

Table 11 - Relubrication intervals and amount of grease for grease lubricated bearings.

It is extremely important to follow the lubrication intervals specified on the motor nameplate. An excessive or insufficient lubrication may increase the bearing temperature during operation, resulting in premature wear of the bearings and consequent reduction of their lifetime.

Table 12 specifies the standard type of grease for the motors and indicates some properties of the lubricating grease. Besides the greases already mentioned in the table, there are others that are compatible with the design of the W50 and can also be used. For these cases refer to WEG respective Installation, Operation and Maintenance Manual.

Frame	Number of poles	Lubricant	Lubricant specification
5009/10	2 - 8	Mobil Polyrex EM	Grease with mineral oil, polyurea-based thickener, ISO VG 115
5809/10	2 - 8		
6806/07 and 6808/09	2 - 8		
7006/07 and 7008/09	2 - 8		

Table 12 - Typical properties of the standard lubricant.

Note:

- For operation of the motors under other than normal operating conditions, such as: ambient temperature above 40 °C, altitude higher than 1,000 m above sea level and axial and/or radial load above the specified values in the tables in this catalog, please refer to WEG.
- The use of greases not recommended by WEG, or in different amounts than specified above, may void the product warranty.

Motors with ball bearings at the drive end (DE) and at the non-drive end (NDE) are fitted with bearings caps and locating bearing at DE and non-locating bearing at NDE with preload washer. When motor is fitted with roller bearing at the drive end, special bearing caps are assembled at the non-drive end where the locating bearing is assembled.

Sleeve Bearing Lubrication

Depending on the application the W50 motor can be supplied with sleeve bearings available on request. This type of bearing requires less maintenance ensures longer lifetime and relubrication intervals.
Table 13 provides key information about lubricants for sleeve bearings.

	Number of poles	Frame	Bearing	Relubrication interval (h) 50 Hz and 60 Hz	Amount of oil (L)	Lubricant	Lubricant specification
Mounting - sleeve bearings	2	5009/10	9-80	8,000	2.8	FUCHS Renolin DTA 10	ISO VG 32 mineral oil with antifoaming agents and antioxidant additives
		5809/10					
		6806/07 and 6808/09					
		7006/07 and 7008/09					
	4, 6 e 8	5009/10	9-90			FUCHS Renolin DTA 15	ISO VG 32 mineral oil with antifoaming agents and antioxidant additives
		5809/10	9-100				
		6806/07 and 6808/09	11-110		4.7		
		7006/07 and 7008/09	11-125				

Table 13 - Lubrication oil used in sleeve bearings.

4.3 Maximum Radial and Axial Loads

The tables below show the maximum allowable radial and axial loads for the W50 motors. The values of the maximum load were calculated considering a L10h bearing lifetime of 40,000 h. The maximum radial load values consider the axial load equal to zero, and the maximum axial load values consider the radial load equal to zero. For applications involving simultaeneously axial and radial load, refer to WEG on bearing lifetime.
To determine the maximum allowable radial and axial loads on the motor shaft, the following factors must be considered:

- Regular operating conditions.
- Shaft material: AISI 4140.
- 2-pole motors: parabolic torque load.
- 4, 6 and 8-pole motors: constant torque load.
- The values consider the application of a standard bearing for horizontal mounted motors.

4.3.1 Radial Loads

The values shown in Tables 14 and 15 for the radial loads refer to the force applied to the center of the shaft end, L/2, and the end of the length of the shaft end, L (Figure 43).

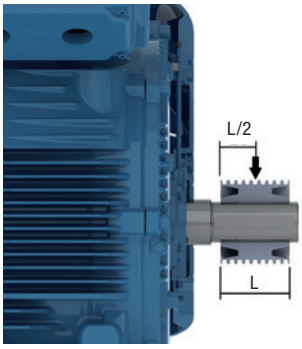

Figure 43 - Radial load applied to the shaft end.

Radial Load - Ball Bearing

Radial load - 50 Hz - Fr (kN)								
Frame	2P		4P		6P		8P	
	L/2	L	L/2	L	L/2	L	L/2	L
5009/10	3	3	7	6	9	8	10	9
5809/10		2	8	7				8
6806/07 and 6808/09	-		6	5	7	7	8	
7006/07 and 7008/09			7	7	9	8	9	9

Table 14 - Maximum allowable radial loads at 50 Hz for ball bearings.

Radial load - 60 Hz - Fr (kN)								
Frame	2P		4P		6P		8P	
	L/2	L	L/2	L	L/2	L	L/2	L
5009/10	2.5	2.5	7	6	8	7	9	8
5809/10		2						
6806/07 and 6808/09	-		6.5		7	6	8	7
7006/07 and 7008/09			7					

Table 15 - Maximum allowable radial loads at 60 Hz for ball bearings.

Radial Load - Roller Bearing

Radial load - 50 Hz - Fr (kN)						
Frame	4P		6P		8P	
	L/2	L	L/2	L	L/2	L
5009/10	29	15	28	14	28	12
5809/10	30		21	8	21	8
6806/07 and 6808/09		12	19		19	
7006/07 and 7008/09	34	13	34	13	34	13

Table 16 - Maximum allowable radial loads at 50 Hz for roller bearings.

Radial load - 60 Hz - Fr (kN)						
Frame	4P		6P		8P	
	L/2	L	L/2	L	L/2	L
5009/10	27	18	29	17	29	14
5809/10	23	14	21	8	25	10
6806/07 and 6808/09	26	11			29	11
7006/07 and 7008/09	33	15	27	10	24	9

Table 17 - Maximum allowable radial loads at 60 Hz for roller bearings.

Note:

- Roller bearings require a minimum radial load (preload) to ensure proper operation. This type of bearing is not recommended for applications with direct coupling.

4.3.2 Axial Loads

Axial Loads for Horizontal Mounted Motors

The values shown in Table 18 indicate the maximum allowable values for axial load on the shaft end for horizontal mounted motors fitted with ball bearing.

Frame	Number of poles	Momentary traction or compression (kN)
5009/10	2	2
	4	5
	6	6
	8	7
5809/10	2	2
	4	6
	6	7
	8	7.5
6806/07 and 6808/09	2	1.5
	4	6
	6	7
	8	7.5
7006/07 and 7008/09	2	1.5
	4	5
	6	6
	8	7

Table 18 - Maximum allowable axial load for horizontal mounted motors.

Axial Loads for Vertical Mounted Motors

The values shown in Table 19 indicate the maximum allowable axial load on the shaft end for mounting in the vertical mounted motors with normal thrust. The table considers DE bearing with angular contact.

Frame	Number of poles	Thrust (kN)	Momentary compression (kN)
5009/10	2	On request	
	4	8	5
	6		6
	8		
5809/10	2	On request	
	4	9	6
	6		7
	8		
6806/07 and 6808/09	2	On request	
	4	10	7
	6		7.5
	8		
7006/07 and 7008/09	2	On request	
	4	8	7
	6		
	8		

Table 19 - Maximum allowable axial load for vertical motors with normal thrust.

5. Mounting

The standard motors are supplied in the F1 mounting (see Figure 44), with the terminal box on the right side of the frame, looking at the non-drive end of the motor.
The mounting designation for the W50 motors follows the NEMA MG-1 Part 4. Different mounting can be supplied, as shown in table 20.

Mounting		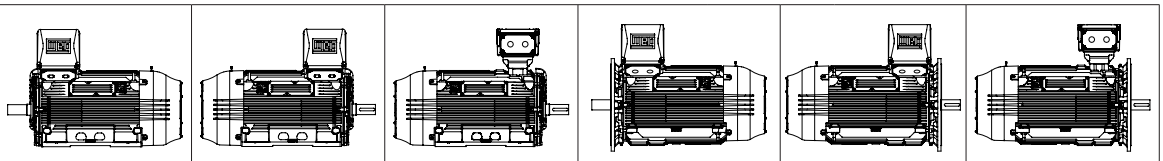						
	WEG reference	F2	F1	F3	F2	F1	F3	
Details	Frame	With feet	With feet		Without feet	Without feet		
	Shaft end	Left	Right		Left	Right		
Mounting		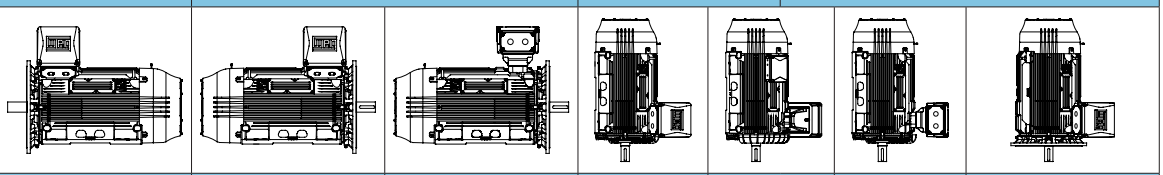						
	WEG reference	F2	F1	F3	W-6	W-7	W-12	W-6
Details	Frame	With feet	With feet		With feet			W/O feet
	Shaft end	Left	Right		Downwards			Downwards
Mounting		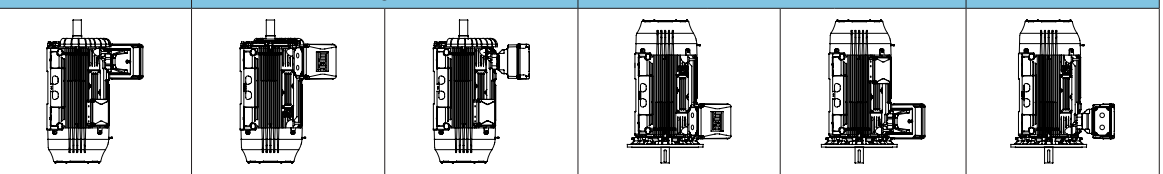						
	WEG reference	W-8	W-5	W-11	W-6	W-7	W-12	
Details	Frame	With feet			With feet			
	Shaft end	Upwards			Downwards			

Table 20 - Mountings configurations.

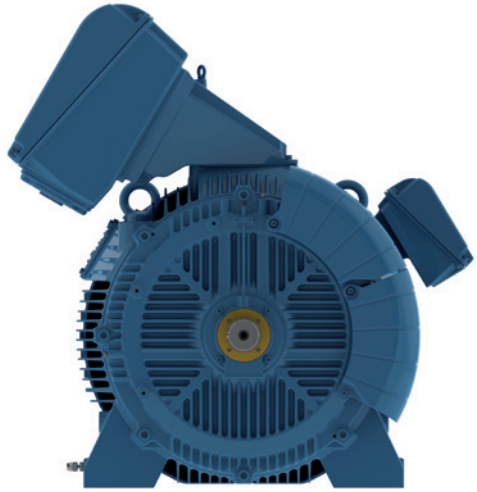

Figure 44 - F1 - mounting.

6. Degree of Protection / Bearing Sealing / Painting

6.1 Degree of Protection

Standard IEC 60034-5 defines the degrees of protection of electrical equipment by means of the characteristic letters IP, followed by two characteristic numerals.
The W50 motors are supplied with degree of protection IP55.

First characteristic numeral	
1st charact. numeral	Definition
0	No-protected machine
1	Machine protected against solid objects greater than 50 mm
2	Machine protected against solid objects greater than 12 mm
3	Machine protected against solid objects greater than 2,5 mm
4	Machine protected against solid objects greater than 1,0 mm
5	Dust-protected machine
6	Dust-tight machine

Table 21 - First characteristic numeral indicates the degree of protection against the ingress of solid objects and accidental or inadvertent contact.

Second characteristic numeral	
2nd charact. numeral	Definition
0	No-protected machine
1	Machine protected against dripping water
2	Machine protected against dripping water when tilted up to 15º
3	Water falling as a spray at any angle up to 60º from the vertical
4	Water splashing against the machine from any direction
5	Water protected by nozzle against the enclosure from any direction
6	Water from heavy seas or water projected in powerful jets
7	Machine protected against the effects of immersion
8	Machine protected against the effects of continuous submersion

Table 22 - Second characteristic numeral indicates the degree of protection against the ingress ff water in the machine r

The W50 motors can also be supplied with higher degree of protection, as indicated below:

- IPW55 for increased degree of protection for outdoor installation.
- IP56 and IPW56 for increased degree of protection against water.
- IP65 and IPW65 for increased degree of protection against dust.
- IP66 and IPW66 for increased degree of protection against dust and water.

Note:

- Letter W means that the motor can be operated in weathering under weathering.

6.2 Bearing Sealing

The bearing seling used on the endshields of the motor is the Taconite Labyrinth, which ensures the degree protection IP55 for the motor frame according to NEMA MG 1 Part 5.
This sealing system protects the motor against the ingress of dust and water into the frame present in the environment.

6.3 Painting

The motors can be applied in harsh industrial environments, in sheltered locations or outdoors, in the presence of SO_2, steams and solid contaminants, high humidity indexes alkali and solvent splashes. The painting plan of the motors ensures a minimum of 1,000 hours of corrosion resistance in the teste by salt spray chamber according to ASTM B117-03 and corrosion category C4, according to ISO 12944-2.

6.3.1 Internal Anti Corrosive Painting

High humidity indexes can result in premature insulation system deterioration which is the main component that ensures the motor lifetime. Motors applied environments with relative air humidity of about 95% do not require additional protections beyond the space heater to prevent moisture condensation inside the motor. However, for use in environments with humidity inexes above 95%, it is recommended to apply an epoxy coating on the internal parts of the motor, also known as tropicalized painting.

7. Voltage / Frequency

According to NEMA MG 1 Part 12 states that, the motor shall operate successfully under running conditions at rated load with a variation in the voltage or the frequency up to the following:

- Plus or minus 10 percent of rated voltage, with rated frequency.
- Plus or minus 5 percent of rated frequency, with rated voltage.
- A combined variation in voltage and frequency of 10 percent (sum of absolute values) of the rated values, provided the frequency variation dos not exceed plus or minus 5 percent of rated frequency.

Performance within these voltage and frequency variations will not necessary be in accordance with the standards established for operation at rated voltage and frequency.

8. Environment

According to NEMA MG 1 Part 14 standard the normal operating conditions of electric motors are:

- Ambient temperature not exceeding 40 °C.
- Altitude not exceeding 3,300 feet (1,000 m) above sea level. The project of the equipment considered a reduction of 1 °C in the thermal limit of the motor for each 100 m of elevation.
- For temperatures and altitudes other than those indicated above, use table 21 to find the correction factor that must be used to define the available useful power (Pmax).

Pmax = Pnom x Derating Factor

T (°C)	Altitude (m)								
	1,000	1,500	2,000	2,500	3,000	3,500	4,000	4,500	5,000
10							0.97	0.92	0.88
15						0.98	0.94	0.90	0.86
20					1.00	0.95	0.91	0.87	0.83
25				1.00	0.95	0.93	0.89	0.85	0.81
30			1.00	0.96	0.92	0.90	0.86	0.82	0.78
35		1.00	0.95	0.93	0.90	0.88	0.84	0.80	0.75
40	1.00	0.97	0.94	0.90	0.86	0.82	0.80	0.76	0.71
45	0.95	0.92	0.90	0.88	0.85	0.81	0.78	0.74	0.69
50	0.92	0.90	0.87	0.85	0.82	0.80	0.77	0.72	0.67
55	0.88	0.85	0.83	0.81	0.78	0.76	0.73	0.70	0.65
60	0.83	0.82	0.80	0.77	0.75	0.73	0.70	0.67	0.62
65	0.79	0.76	0.74	0.72	0.70	0.68	0.66	0.62	0.58
70	0.74	0.71	0.69	0.67	0.66	0.64	0.62	0.58	0.53
75	0.70	0.68	0.66	0.64	0.62	0.60	0.58	0.53	0.49
80	0.65	0.64	0.62	0.60	0.58	0.56	0.55	0.48	0.44

Table 23 - Derating factor considering altitude and ambient temperature.

9. Operation Characteristics

During installation and any intervention on the machine, all recommendations for handling, lifting and maintenance must be observed.

9.1 Thermal Protection

In order to monitor the operating condition of the motor, all the W50 motors are fitted with temperature sensors in the windings and on the bearings.
In its standard version, the motors are fitted with two resistance temperature detector (Pt-100) with three wires per phase and one resistance temperature detector (Pt-100) per bearing (see Figure 45).
Motors with sleeve bearing use Pt-100 with connection head (see Figure 46) fixed directly to the bearing. These devices generally have three wires, but they can be supplied with 2, 4, 6 (duplex) and 8 cables (duplex), and can be supplied with with ATEX or Ex certifications.

Figure 45 - Pt-100.

Figure 46 - Pt-100 with connection head.

The W50 motors can also be supplied with other accessories:

- Thermostat: bimetallic thermal protectors with silver contacts, NC type (normally closed), which open when predetermined temperature rise is reached. When the activation temperature of the bimetal thermal protector decreases, the thermostat will return to its original position instantaneously allowing to close the contact and the consequent restart of the motor.
  The thermostats are series connected to the motor coil, and thus can be used for switching off the motor. A second set of bimetal thermal protectors can be used for the alarm, however in this case it must be connected to a specific alarm circuit.
- PTC Thermistors: increase their resistance very fast with temperature increase. The sudden change in resistance interrupts the current in PTC, activates an output relay, which turns off the main circuit (see Figure 47).

Figure 47 - PTC Thermistor.

The thermistors have reduced size, do not have mechanical wear, and provide faster response when compared to other temperature sensors. However they do not allow continuous monitoring of the motor heating process. Thermistors with their electronic circuit controls ensure complete protection against overheating caused by phase-fault, overload, under/overvoltages or frequent reversals of direction of rotation or on/off cycles. Thermistors can be used for alarm and tripping operation.

9.2 Operation with Frequency Inverter

The W50 motors fitted with rolling bearings have a design suitable for applications with variable speed. The standard motor is designed for sine wave filter inverter operation, otherwise a motor with reinforced insulation must be supplied.
All W50 motors fitted with rolling bearings have rigid shafts, avoiding the need of skipping frequencies on the inverter in the operating range; however, for speeds above the catalog limits, consult WEG. The W50 motors can be supplied for high speed version up to 5,000 rpm also on request.

9.2.1 Influence of the Inverter on Temperature Rise of the Motor

The induction motor may present a higher temperature increase when fed by a frequency inverter, than when fed with sine wave voltage. This overtemperature rise is due to the combination of two factors: the increase of losses on the motor as a function of the harmonic components of the PWM voltage supplied by the inverter, and the reduction of the effectiveness of the cooling system when the self-ventilated motor operates at low frequencies. Basically the following

solutions can be used to prevent the motor overheating:
- Reduction of the rated torque.
- Use of an independent cooling system (forced ventilation).

Criteria for Torque Reduction

In order to maintain the temperature of the motors within acceptable levels when operating with frequency inverters and without forced ventilation, the load limits shown in Figure 48 must be observed (derating curve of the W50 motor). This torque reduction is a required solution when the motor drives a load with constant torque. In order to drive loads with quadratic torque, usually it is not necessary to apply any torque reduction factor.

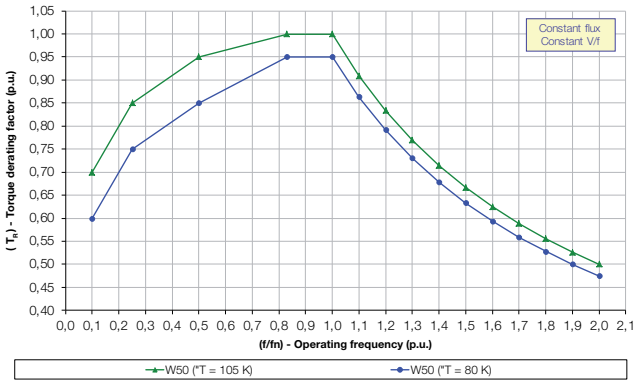

Figure 48 - Derating curve for motors driven by frequency inverter.

For more information on motors operated with frequency inverter, refer to the Technical Guide - Induction motors fed by PWM frequency inverters (50029350), which can be found at *www.weg.net*.

Forced Ventilation Kit

Motors driven by frequency inverter at low speeds generally require an independent ventilation system. In these cases, the application of a forced ventilation kit ensures constant cooling of the motor throughout its speed range.
The forced ventilation kit (see Figure 49) comprises a 4-pole motor with independent power supply from the main motor, and it is not subject to its operating conditions.
This ventilation kit uses a motor with natural cooling method (IC410 or IC40).

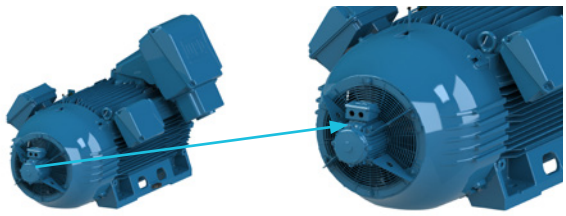

Figure 49 - Detail of the assembly of the forced ventilation kit with cast iron air baffle.

The supply voltages available for the forced ventilation kit of the W50 motors are listed in table 22.

Supply voltage available for the forced ventilation kit (V)
208-230/460
220-240/380-415
220/380-440
380-415/660
525-550
575
220/380
220/440
230/460
240/480
380/660
400/690
440
460
480

Table 24 - Supply voltages available for the forced ventilation kit.

Note:
- Motors with forced ventilation kits present an increase of 3 dB(A) in the noise level, without taking into account the noise produced by the frequency inverter. Since the global noise value depends on the inverter switching frequency, for more precise information, contact WEG.
- The use of the forced ventilation kit changes the motor length. In Section 12 is possible to check the motor length increase due to the use of the forced ventilation kit.

9.2.2 Common-Mode Voltages

The common mode voltages occur when the sum of the voltages at the inverter output is different from zero. They are the main reason why currents flow through the motor bearings driven by static inverter. These currents wear the balls and the ball bearing races, reducing the bearing lifetime and causing premature failures. The W50 motors are supplied with shaft grounding brushes to prevent the current flow through the bearing and this avoid its premature failure, see item 2.4. Grounding Brush.

10. Installation Characteristics

Some important aspects must be taken into account when dimensioning the installations of the W50 motors, which are described below.

10.1 Strength and Mass of the Motor Mechanical Support System (MSS)

Regardless the mounting type or design of the motor Mechanical Support System (MSS), the assembly must be strong enough with relatively high mass.
Several tools can be used to evaluate the strength of the foundation, such as experimental or numerical analysis.
The base must present vibration levels less than 30% of the vibration measured on the motor in positions next to the fixation points in the horizontal, vertical and axial directions.
The design of the base must also ensure that its natural frequencies also keeping a separation of ±5% from the natural frequency to twice and three times the speed frequency and to once and twice the power line frequency (60 e 120 Hz). Motors that operate with frequency inverter and variable mechanical speed must have the natural frequencies of the system removed from the inverter operating range, so that there are no natural frequencies of the whole system (motor + base + driven equipment) throughout this operating range.
Metal fixtures of the motor must feature anchors securely fastened to the foundation anchor plate, avoiding the connection to the motor only with metal parts. Since structural steels absorb little external vibration and do not damp the motor vibrations, the global vibration and noise levels may increase.
The base design must be robust and withstand the motor without significant deformation, taking into account the mass and stresses on the foundation informed by WEG on the motor data sheet.

10.2 Dimensional Control

The dimensional control must be precise, with tolerance for flatness, parallelism and perpendicularity between the supports, avoiding soft foot or motor misalignment.
The area of the motor footrests in the drive end and non-drive end must be identical. The foundation must also ensure 100% support of the DE and NDE foot.
The foot flatness must be controlled for each motor.
W50 motors can have flatness of the feet below 0.127 mm according to IEEE 841 standard.
Vertical mounted motors must be mounted on rectangular or round, solid, steel plates with a hole in the center for the shaft extension. The flange support surface must be machined, with threaded or throughout holes, but the fastening screws must be tightened with controlled torque on flat surfaces.
The steel plate must be at least three times thicker than the machine flange (WEG recommend five times). This mounting base plate must be securely fastened to a solid and leveled surface (in compliance with IEC 60034-14 requirements).

11. Special Accessories

Some special accessories can be installed on the W50 motors for specific functions, such as speed control, temperature monitoring, and protection against oscillations of the power line or lightning discharges.

11.1 Encoder

For precise speed and shaft position control in critical applications, the W50 motors can be supplied with an encoder.
WEG recommends the use of the following encoders:

- Dynapar - series B58N - 1,024 ppr and 2,048 ppr (hollow shaft). This encoder is easy to mount and ensures good precision (see Figure 50).

Figure 50 - Dynapar B58N Encoder.

- Leine Linde - 861 - 1,024 ppr and 2,048 ppr (hollow shaft). It can also be supplied as an optional item and offers good precision (see Figure 51).

Figure 51 - Leine Linde 861 Encoder.

Other encoder models can be supplied on request.
Note:

- Mounted on the non-drive end of the motor and directly coupled to the shaft extension, the use of this device increases the motor length, which varies according to the encoder.

11.2 Protection Against Voltage Surge

The terminal box of the motor of the W50 high-voltage line can be equipped with a surge arrester per phase (see Figure 52). These components are classified according to the following voltage classes: 3 kV, 6 kV, 9 kV or 12 kV.

Figure 52 - Surge arrester.

Besides the surge arrester, the high-voltage motors also have a capacitor per phase as special component (see Figure 53). These devices are installed in the main terminal box and their application recommended in systems potentially subject to voltage peaks during switching operations or lightning

discharges. The capacitors are installed in a stainless steel enclosure and have the following features:

- Capacitance - 0.5 μF
- Rate voltage - up to 7.2 kV
- Voltage class - 15 kV

Figure 53 - Capacitor used in the W50 line.

11.3 Leveling Screw (Vertical Jacking Screws)

In order to ensure perfect alignment between the driven machine and the motor, WEG supplies the leveling screws set as an accessory. These components must be used only during the motor installation and must be removed after the shims are placed between the foundation and the machine.

11.4 Non-Reverse Ratchet

Some applications do not allow the inversion of direction of rotation. In order to prevent this reversal, the W50 motors must be fitted with the non-reverse ratchet (see Figure 54).

Figure 54 - Non-reverse ratchet.

11.5 Thermometer

In order to monitor the bearing temperature, for both rolling bearing and sleeve bearing, the motors can be fitted with thermometers.

On the rolling bearings, one thermometer can be installed on each endshield, and for sleeve bearings, thermometers can be installed on the bearing shell or oil tank.

Figure 55 - Thermometers with sights located on the sides.

11.6 Interchangeability Solutions

With the technological progress, machines are increasingly smaller and more efficient, which consequently results in interchangeability problems, especially for older motors or from different manufacturers. In order to solve this problem, the W50 motors can be supplied with an intermediate base (see Figure 56), or also with dimensional variations, especially on feet and frame.

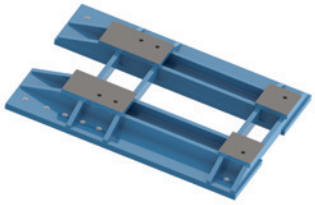

Figure 56 - Intermediate base.

If the replacement of a motor with a frame size (shaft end height) immediately above the output power is required, we supply motors on the frame above with a dedicated design, keeping the mass, length and noise similar to the lower frame size. If necessary to use the height of two frames above (for example, change the 315 frame by the 400 frame), the motors can be supplied with intermediate steel base. In this case, the upper part of the base features the fixation drilling of the standard motor in the required power, and the lower base the fixation drilling of two frames immediately above.

11.7 Automatic Lubricator

The automatic lubricator available for the W50 motors reduces the motor maintenance, especially in applications in which the motor is in a place with difficult access and high ambient temperature or speeds.

The lubricator, when supplied with the motor, has polyurea based grease and it is configured for the lubrication intervals specified on the motor nameplate. The grease canister must be replaced with the same grease or compatible grease in order to ensure smooth motor operation. The grease outlet works by the same way of the motors with grease nipple. Easily-accessible, the lubricator can be mounted on the motor sides or endshields (see Figure 57).

Figure 57 - Lubricator located on the sides.

12. Construction Features

Frame			5009/10	5809/10	6806/07	6808/09	7006/07	7008/09
Mechanical features								
Mounting			F1					
Frame	Material		Cast Iron FC-200					
Degree of protection			IP55					
Grounding			Double grounding (1 terminal box + 1 frame)					
Cooling method			TEFC					
Fan	Material	2P	Cast Iron FC-200					
		4P - 12P						
Fan cover	Material		Cast iron FC-200 (rolling bearings) - Steel (sleeve bearings)					
Endshields			Cast Iron FC-200					
Drain plug			Automatic drain plug					
Bearing	Shielded/clearance DE		C3					
	Shielded/clearance NDE		C3					
	Locating bearing		Fixed on DE with external and internal bearing cap and preload spring NDE					
	Drive end	2P	6314	6314	6218	6218	6220	6220
		4P - 12P	6320	6322	6324	6324	6328	6328
	Non-drive end	2P	6314	6314	6218	6218	6220	6220
		4P - 12P	6316	6319	6319	6319	6322	6322
Sleeve bearings	Axial clearence	2P	6 mm		6 mm			
		4P - 12P			8 mm			
	Locating bearing		Located both bearings					
	Drive end	2P	9-80	9-80	9-80	9-80	9-80	9-80
		4P - 12P	9-90	9-100	11-110	11-110	11-125	11-125
	Non-drive end	2P	9-80	9-80	9-80	9-80	9-80	9-80
		4P - 12P	9-90	9-100	11-110	11-110	11-125	11-125
Bearing seal			Taconite Labyrinth					
Lubrification	Type of grease		Mobil Polyrex EM					
	Grease fitting		With grease fitting					
Terminal box	Material		Cast Iron FC-200					
Lead inlet	Main LV	Size	2 x NPT 3"	2 x NPT 4"				
	Main HV		NPT 3"					
	Additional		3 x NPT 3/4"					
	Plug		Plastic threaded plug					
Shaft	Material		AISI 4140					
	Threaded hole	2P	M20					
		4P -12P	M24					
Shaft key			C key					
Vibration level			Grade A					
Balancing without/half/full key			With 1/2 Key					
Nameplate	Material		Laser printed Stainless Steel AISI 304					
Painting	Type		214P					
	Color		RAL 5009					
Electrical features								
Design			Low voltage, up to 500 cv - design N / high voltage - not applicable					
Voltage	Single speed		380 V a 6,600 V					
Winding	Impregnation		Low voltage - resin continuous flow / high voltage - VPI					
	Insulation class		F (DT 80K)					
Space heater			110/220 V - 220/440 V					
Service factor			1.00					
Ambient temperature	Maximum		+40 °C					
	Minimum		-20 °C					
Starting method			DOL					
Rotor			Die cast aluminium (7006/07 8 poles with copper bar)					Copper bars
Winding thermal protection			Pt-100 - 3 wires (2 per phase)					
Bearing thermal protection			Pt-100 - 3 wires (1 per bearing)					

Notes: 1) Other optional features, on request;
2) Some combinations of optional features are not allowed - contact WEG;
3) Vertical motors are supplied with angular contact ball bearing, except frames 5009/10 and 5809/10 (4P - 12P).
4) It is mandatory to use a terminal board for power ratings lower than those indicated (inclusive): 2 / 4 Poles - 300 HP; 6 Poles - 250 HP; 8 Poles - 200 HP; 10 / 12 Poles - 125 HP.

SD - Standard
O - Optional
S - Special

13. Optional Features [1) 2)]

Frame	315 H/G	355 J/H	400 L/K	400 J/H	450 L/K	450 J/H
Mechanical optionals [1)]						
Terminal box type						
Cast iron	SD	SD	SD	SD	SD	SD
Steel	O	O	O	O	O	O
Terminal block						
Without connection bolt (low voltage)	SD	SD	SD	SD	SD	SD
Connection bolt (low and high voltage)	O	O	O	O	O	O
Cable gland						
Without cable gland	SD	SD	SD	SD	SD	SD
Plastic	O	O	O	O	O	O
Brass	O	O	O	O	O	O
Stainless steel	O	O	O	O	O	O
Flange						
Without flange	SD	SD	SD	SD	SD	SD
Flange D	O	O	O	O	O	O
Flange C	O	O	O	O	O	O
Fan						
Cast iron	SD	SD	SD	SD	SD	SD
Aluminium	S	S	S	S	S	S
Bronze	S	S	S	S	S	S
Carbon steel	S	S	S	S	S	S
Drive end bearing type						
Ball bearing	SD	SD	SD	SD	SD	SD
Rolling bearing NU design (4P - 12P)	O	O	O	O	O	O
Sleeve bearing	O	O	O	O	O	O
Non-drive end bearing type						
Ball bearing [3)]	SD	SD	SD	SD	SD	SD
Sleeve bearing	O	O	O	O	O	O
Rolling bearing	S	S	S	S	S	S
Insulated drive endshield hub						
Non insulated	SD	SD	SD	SD	SD	SD
Insulated bearing	S	S	S	S	S	S
Insulated end shield	O	O	O	O	O	O
Insulated non-drive endshield hub						
Insulated end shield	SD	SD	SD	SD	SD	SD
Insulated bearing	S	S	S	S	S	S
Non insulated	O	O	O	O	O	O
Bearing cap						
Bearing cap	SD	SD	SD	SD	SD	SD
Drive end bearing seal						
Taconite labyrinth	SD	SD	SD	SD	SD	SD
INPRO/SEAL	O	O	O	O	O	O
Taconite labyrinth with slinger	O	O	O	O	O	O
Mechanical seal	O	O	O	O	O	O
Joint seal						
Loctite 5923 (Permatex)	O	O	O	O	O	O
Shaft						
Material: AISI 4140	SD	SD	SD	SD	SD	SD
Shaft locking device	SD	SD	SD	SD	SD	SD
Threaded center hole (shaft)	SD	SD	SD	SD	SD	SD
Second shaft end	S	S	S	S	S	S
Balance type						
Normal balance with 1/2 key (for 4 poles on)	SD	SD	SD	SD	SD	SD
Special balance with 1/2 key (for 2 poles)	SD	SD	SD	SD	SD	SD

Notes: 1) Other optional features, on request;
2) Some combinations of optional features are not allowed - contact WEG;
3) Vertical motors are supplied with angular contact ball bearing, except frames 5009/10 and 5809/10 (4P - 12P).
4) It is mandatory to use a terminal board for power ratings lower than those indicated (inclusive): 2 / 4 Poles - 300 HP; 6 Poles - 250 HP; 8 Poles - 200 HP; 10 / 12 Poles - 125 HP.

SD - Standard
O - Optional
S - Special

13. Optional Features [1) 2)]

Frame	315 H/G	355 J/H	400 L/K	400 J/H	450 L/K	450 J/H
Key						
C key	SD	SD	SD	SD	SD	SD
B key	S	S	S	S	S	S
Vibration level						
Grade A	SD	SD	SD	SD	SD	SD
Grade B	O	O	O	O	O	O
Lubrication						
Mobil Polyrex EM	SD	SD	SD	SD	SD	SD
Aeroshell 7	S	S	S	S	S	S
Isoflex NBU 15	S	S	S	S	S	S
Oil Mist	S	S	S	S	S	S
Grease fitting						
Carbon steel grease fitting	SD	SD	SD	SD	SD	SD
Threaded grease fitting NPT 1/4"	S	S	S	S	S	S
Grease fiting able to Oil Mist	S	S	S	S	S	S
Grease outlet						
Grease outlet by plastic slide valve	SD	SD	SD	SD	SD	SD
Grease outlet through endshield	S	S	S	S	S	S
Drain						
Automatic drain plug	SD	SD	SD	SD	SD	SD
Threaded drain plug (closed)	O	O	O	O	O	O
Stainless stell threaded drain plug (closed)	O	O	O	O	O	O
Threaded T-type drain plug (automatic)	O	O	O	O	O	O
Closed plastic drain plug	S	S	S	S	S	S
Degree of protection						
IP55	SD	SD	SD	SD	SD	SD
IP56	O	O	O	O	O	O
IP65	O	O	O	O	O	O
IP66	O	O	O	O	O	O
IPW55	O	O	O	O	O	O
IPW56	O	O	O	O	O	O
IPW65	O	O	O	O	O	O
IPW66	O	O	O	O	O	O
Painting plan						
214P: according to ISO 12944 - Corrosivity Category C4 and durability class "Medium". WEG recommendation: indicated for aggressive sheltered and non-sheltered ambient. Industrial application that allows SO2, steams, solid contaminant, high humidity and alkali and solvent sprinkles presence	SD	SD	SD	SD	SD	SD
212E: according to ISO 12944 - Corrosivity Category C5 (I and M) and durability class "High". WEG recommendation: indicated to marine aggressive ambient or marine industrial ambient, sheltered allowing high humidity and alkali and solvent sprinkles presence. Indicate to pulp and paper, mining and chemical industrial applications	O	O	O	O	O	O
212P: according to ISO 12944 - Corrosivity Category CX/C5 (I and M) and durability class "Very High". WEG recommendation: indicated to marine aggressive ambient or marine industrial ambient, sheltered or nonsheltered, allowing high humidity presence. Indicate to pulp and paper, mining and chemical industrial applications	O	O	O	O	O	O
Internal tropicalized painting (epoxi)	O	O	O	O	O	O
Other mechanical optionals [1)]						
Ventilated bearing	SD	SD	SD	SD	SD	SD
Drip cover	O	O	O	O	O	O
Rubber slinger	S	S	S	S	S	S

Notes: 1) Other optional features, on request;
2) Some combinations of optional features are not allowed - contact WEG;
3) Vertical motors are supplied with angular contact ball bearing, except frames 5009/10 and 5809/10 (4P - 12P).
4) It is mandatory to use a terminal board for power ratings lower than those indicated (inclusive): 2 / 4 Poles - 300 HP; 6 Poles - 250 HP; 8 Poles - 200 HP; 10 / 12 Poles - 125 HP.

SD - Standard
O - Optional
S - Special

13. Optional Features [1) 2)]

Frame	315 H/G	355 J/H	400 L/K	400 J/H	450 L/K	450 J/H
Electrical optionals [1)]						
Winding protection						
3 wire Pt-100, 2 per phase (alarm)	SD	SD	SD	SD	SD	SD
3-wire Pt-100, 2 per phase (tripping)	SD	SD	SD	SD	SD	SD
3 wire Pt-100, 2 per phase, calibrated (alarm)	O	O	O	O	O	O
3-wire Pt-100, 2 per phase, calibrated (tripping)	O	O	O	O	O	O
PTC thermistor - 130 °C (alarm)	O	O	O	O	O	O
PTC thermistor - 155 °C (tripping)	O	O	O	O	O	O
Bimetal thermal protector - 130 °C (alarm)	O	O	O	O	O	O
Bimetal thermal protector - 155 °C (tripping)	O	O	O	O	O	O
Bearing thermal protection						
3-wire Pt-100 - drive end / non drive end	SD	SD	SD	SD	SD	SD
3-wire calibrated Pt-100 - drive end / non drive end	O	O	O	O	O	O
Two 3-wire Pt-100 - drive end / non drive end	O	O	O	O	O	O
Two 3-wire calibrated Pt-100 - drive end / non drive end	O	O	O	O	O	O
Bimetal thermal protector - drive end / non-drive end	O	O	O	O	O	O
Space heaters						
110-127 / 220-240 V	SD	SD	SD	SD	SD	SD
380-480 V	O	O	O	O	O	O
Insulation class						
F	SD	SD	SD	SD	SD	SD
H	S	S	S	S	S	S
Forced ventilation kit						
Forced ventilation kit prepared for encoder assembly	O	O	O	O	O	O
Encoder						
Without encoder	SD	SD	SD	SD	SD	SD
Dynapar B58N	O	O	O	O	O	O
Leine&Linde XH861 900220-1024	O	O	O	O	O	O
Leine&Linde XH861 900220-2048	O	O	O	O	O	O
Grounding brush kit						
Drive end grounding brush	O	O	O	O	O	O
Drive end SGR grounding brush	O	O	O	O	O	O

Notes: 1) Other optional features, on request;
2) Some combinations of optional features are not allowed - contact WEG;
3) Vertical motors are supplied with angular contact ball bearing, except frames 5009/10 and 5809/10 (4P - 12P).
4) It is mandatory to use a terminal board for power ratings lower than those indicated (inclusive): 2 / 4 Poles - 300 HP; 6 Poles - 250 HP; 8 Poles - 200 HP; 10 / 12 Poles - 125 HP.

SD - Standard
O - Optional
S - Special

14. Electrical Data

14.1 W50 - Low Voltage

Output		Frame	Full Load Torque (ft.lb)	Locked Rotor Current		Locked Rotor Torque Tl/Tn	Break-down Torque Tb/Tn	Inertia J (sq.ft.lb)	Allowable locked rotor time (s)		Weight (lb)	Sound dB(A)	Service Factor	440 V							
														Rated speed (rpm)	% of full load						Full load current In (A)
															Efficiency			Power Factor			
HP	kW			Code	Il/In				Hot	Cold					50	75	100	50	75	100	
Il Poles																					
350	260	5009/10	507	G	6,5	0,9	2,5	102	24	53	3374	79,0	1,00	3579	94,5	95,4	95,8	0,84	0,88	0,90	396
400	300	5009/10	579	J	8,1	1,5	2,8	115	24	53	3521	79,0	1,00	3580	94,3	94,9	95,8	0,80	0,86	0,88	467
450	330	5009/10	652	G	6,8	1,0	2,5	135	24	53	3726	79,0	1,00	3575	95,4	95,8	95,8	0,85	0,89	0,91	497
500	370	5809/10	724	F	6,5	0,9	2,4	115	45	99	4831	82,0	1,00	3579	95,4	95,8	96,2	0,80	0,89	0,90	561
600	440	5809/10	868	G	6,7	0,9	2,2	150	36	79	5186	82,0	1,00	3583	95,4	96,2	96,2	0,81	0,88	0,89	674
700	515	6808/09	1013	G	7,5	1,3	2,4	228	20	44	6505	82,0	1,00	3580	95,4	95,8	96,5	0,84	0,90	0,91	770
800	590	6808/09	1158	G	6,7	1,1	2,1	240	26	57	6816	82,0	1,00	3580	95,4	95,8	96,5	0,84	0,90	0,91	882
900	660	6808/09	1301	J	8,8	1,1	3,2	261	26	57	7058	82,0	1,00	3585	95,4	96,2	96,5	0,81	0,86	0,87	1030
1000	750	6808/09*	1447	H	7,4	1,4	2,5	305	26	57	7340	82,0	1,00	3580	95,8	96,2	96,5	0,85	0,90	0,91	1120
IV Poles																					
400	300	5009/10	1162	H	7,0	1,3	2,5	154	20	44	4275	79,0	1,00	1784	95,0	95,8	96,2	0,75	0,83	0,86	476
450	330	5009/10	1307	J	8,5	1,6	3,0	144	19	42	3506	79,0	1,00	1784	95,0	95,8	96,2	0,75	0,83	0,86	523
500	370	5009/10	1452	J	8,5	1,8	2,5	160	19	42	3599	79,0	1,00	1784	95,4	95,8	96,2	0,72	0,82	0,86	587
600	440	5809/10	1736	G	6,5	1,8	2,0	291	33	73	5336	82,0	1,00	1791	95,6	96,0	96,0	0,79	0,85	0,87	691
700	515	5809/10	2028	H	7,3	1,9	2,3	304	33	73	5435	82,0	1,00	1788	95,9	96,5	96,6	0,75	0,82	0,85	823
800	590	5809/10	2314	J	8,3	2,5	2,6	305	15	33	6174	82,0	1,00	1791	95,8	96,2	96,5	0,74	0,82	0,85	944
900	660	6808/09	2608	J	8,5	2,0	2,8	545	16	35	7027	82,0	1,00	1788	96,0	96,8	97,0	0,73	0,82	0,85	1050
1000	750	7008/09	2891	H	7,5	0,7	2,4	666	20	44	9605	82,0	1,00	1792	95,4	95,8	96,2	0,71	0,81	0,85	1200
1100	800	7008/09	3180	G	7,0	0,7	2,4	666	20	44	9605	82,0	1,00	1792	95,6	96,3	96,3	0,76	0,84	0,87	1250
1250	900	7008/09	3614	G	7,0	0,7	2,4	666	20	44	9605	82,0	1,00	1792	95,8	96,5	96,5	0,76	0,84	0,87	1410
VI Poles																					
300	220	5009/10	1314	G	6,4	2,0	2,5	208	16	35	3316	77,0	1,00	1183	94,7	95,2	95,1	0,77	0,84	0,87	349
350	260	5009/10	1534	G	6,4	1,3	2,1	243	16	35	3486	77,0	1,00	1182	94,5	95,4	95,8	0,77	0,85	0,87	409
400	300	5809/10	1744	G	6,3	1,2	2,4	273	26	57	4132	77,0	1,00	1188	95,0	95,8	95,8	0,71	0,81	0,84	489
450	330	5809/10	1962	G	6,3	1,2	2,5	300	26	57	4311	77,0	1,00	1188	95,4	95,8	95,8	0,75	0,83	0,85	532
500	370	5809/10	2181	F	6,2	1,3	2,5	328	26	57	5060	77,0	1,00	1188	95,5	96,2	96,2	0,75	0,83	0,86	587
600	440	5809/10	2617	H	7,5	1,5	2,7	404	25	55	5435	77,0	1,00	1188	95,6	96,3	96,3	0,70	0,81	0,85	705
700	515	6806/07	3042	H	7,5	1,5	2,5	505	18	40	6774	81,0	1,00	1192	96,1	96,5	96,5	0,68	0,80	0,84	834
800	590	6808/09	3477	J	7,8	1,6	2,2	570	20	44	7122	81,0	1,00	1192	95,8	96,2	96,2	0,67	0,79	0,83	970
900	660	7008/09	3908	G	6,5	0,7	2,3	840	20	44	10143	81,0	1,00	1193	95,8	96,2	96,2	0,78	0,84	0,87	1030
950	700	7008/09	4126	G	6,5	0,7	2,3	897	20	44	10297	81,0	1,00	1193	95,8	96,2	96,2	0,78	0,84	0,87	1100
1000	750	7008/09	4343	G	6,5	0,7	2,3	897	20	44	10584	81,0	1,00	1193	95,8	96,2	96,5	0,78	0,84	0,87	1170
1100	800	7008/09	4773	G	6,5	0,7	2,3	954	20	44	10716	81,0	1,00	1194	95,8	96,5	96,5	0,78	0,84	0,87	1250
1250	900	7008/09*	5424	G	6,7	0,7	2,3	1070	20	44	11010	81,0	1,00	1194	96,2	96,5	96,5	0,76	0,84	0,86	1420
VIII Poles																					
250	185	5009/10	1459	F	5,5	1,2	2,3	232	26	57	3495	75,0	1,00	888	94,5	95,0	95,1	0,70	0,78	0,82	311
300	220	5009/10	1746	G	6,3	1,6	2,9	275	21	46	3760	75,0	1,00	890	94,9	95,3	95,3	0,68	0,78	0,82	369
350	260	5809/10	2033	F	5,5	1,2	2,3	363	21	46	4216	75,0	1,00	892	94,5	95,0	95,0	0,68	0,78	0,82	438
400	300	5809/10	2326	F	5,5	1,2	2,3	406	23	51	4403	75,0	1,00	891	95,3	95,8	95,7	0,68	0,78	0,82	502
450	330	5809/10	2614	G	6,0	1,2	2,3	500	17	37	5285	75,0	1,00	892	95,0	95,4	95,0	0,68	0,78	0,82	556
500	370	6806/07	2901	H	6,8	1,1	2,3	653	22	48	6350	79,0	1,00	893	95,0	95,4	95,4	0,67	0,78	0,82	621
600	440	6806/07*	3481	H	6,8	1,1	2,3	764	22	48	6747	79,0	1,00	893	95,0	95,8	95,8	0,67	0,78	0,82	735
700	515	6808/09	4061	G	6,6	1,1	2,3	874	22	48	7122	79,0	1,00	893	95,0	95,8	95,8	0,67	0,78	0,82	860
800	590	7008/09	4631	F	5,9	0,7	2,1	1300	26	57	10447	79,0	1,00	895	95,6	96,0	96,0	0,70	0,80	0,84	960
850	630	7008/09	4920	F	5,9	0,7	2,1	1300	26	57	10447	79,0	1,00	895	95,8	96,2	96,2	0,70	0,80	0,84	1020
900	660	7008/09	5210	F	5,9	0,7	2,1	1380	26	57	10725	79,0	1,00	895	95,8	96,2	96,2	0,70	0,80	0,84	1070
950	700	7008/09	5499	F	5,9	0,7	2,1	1450	26	57	11010	79,0	1,00	895	95,8	96,2	96,5	0,70	0,80	0,84	1130
1000	750	7008/09*	5789	F	5,9	0,7	2,1	1560	26	57	11404	79,0	1,00	895	95,8	96,2	96,5	0,72	0,81	0,85	1200

Note: 1) Temperature rise ΔT 105 K.

14. Electrical Data

14.1 W50 - Low Voltage

Output		Frame	Full Load Torque (ft.lb)	Locked Rotor Current		Locked Rotor Torque Tl/Tn	Break-down Torque Tb/Tn	Inertia J (sq.ft.lb)	Allowable locked rotor time (s)		Weight (lb)	Sound dB(A)	Service Factor	440 V							
														Rated speed (rpm)	% of full load						Full load current In (A)
															Efficiency			Power Factor			
HP	kW			Code	Il/In				Hot	Cold					50	75	100	50	75	100	
X Poles																					
125	90	5009/10	912	G	5,5	1,5	2,0	164	15	33	2904	75,0	1,00	710	91,7	93,0	93,0	0,51	0,63	0,70	181
150	110	5009/10	1095	G	5,5	1,5	2,0	199	15	33	3091	75,0	1,00	710	92,4	93,0	93,0	0,51	0,63	0,70	222
175	132	5009/10	1277	H	5,5	1,5	2,0	239	15	33	3466	75,0	1,00	710	92,4	93,6	93,6	0,51	0,63	0,70	264
200	150	5009/10	1459	H	5,8	1,6	2,0	283	15	33	3711	75,0	1,00	710	92,4	93,6	94,1	0,51	0,63	0,70	299
250	185	5809/10	1817	H	5,5	1,3	2,2	392	20	44	4311	75,0	1,00	713	93,0	93,6	94,1	0,48	0,60	0,67	385
300	220	5809/10	2189	H	5,6	1,6	1,9	462	20	44	5060	75,0	1,00	710	93,0	94,1	94,5	0,49	0,61	0,68	449
350	260	5809/10*	2543	H	6,0	1,3	2,2	551	20	44	5623	75,0	1,00	713	93,6	94,5	94,5	0,49	0,61	0,68	531
400	300	6806/07	2902	G	5,9	0,7	2,0	613	22	48	6260	79,0	1,00	714	94,1	95,0	95,4	0,60	0,72	0,78	529
450	330	6806/07	3265	G	5,9	0,7	2,0	727	22	48	6710	79,0	1,00	714	94,5	95,4	95,4	0,60	0,72	0,78	582
500	370	6808/09	3628	G	5,9	0,7	2,0	784	22	48	6915	79,0	1,00	714	95,0	95,4	95,8	0,60	0,72	0,78	650
550	400	6808/09	3991	G	5,9	0,7	2,0	897	22	48	7365	79,0	1,00	714	95,4	95,8	95,8	0,60	0,72	0,78	702
600	440	6808/09	4354	G	5,9	0,7	2,0	954	22	48	7590	79,0	1,00	714	95,4	96,2	96,2	0,60	0,72	0,78	769
650	480	7008/09	4716	G	6,2	0,8	2,2	1520	25	55	8939	79,0	1,00	714	95,4	95,8	96,2	0,67	0,77	0,81	808
700	515	7008/09	5079	G	6,2	0,8	2,2	1620	25	55	9184	79,0	1,00	714	95,7	95,8	96,2	0,67	0,77	0,81	867
750	560	7008/09	5442	G	6,2	0,8	2,2	1730	25	55	9409	79,0	1,00	714	95,7	95,8	96,2	0,67	0,77	0,81	943
800	590	7008/09	5805	G	6,2	0,8	2,2	1830	25	55	9651	79,0	1,00	714	95,7	96,2	96,2	0,67	0,77	0,81	994
850	630	7008/09	6168	G	6,2	0,8	2,2	1930	25	55	9942	82,0	1,00	714	95,7	96,2	96,4	0,67	0,77	0,81	1060
XII Poles																					
175	132	5809/10	1529	F	4,5	1,2	1,7	440	20	44	4461	82,0	1,00	593	93,6	94,1	94,1	0,50	0,61	0,67	275
200	150	5809/10	1747	F	4,5	1,2	1,7	462	20	44	5285	82,0	1,00	593	93,6	94,1	94,1	0,50	0,61	0,67	312
250	185	5809/10	2188	F	4,5	1,2	1,7	514	20	44	5285	82,0	1,00	592	93,6	94,1	94,1	0,50	0,62	0,68	379
300	220	6808/09	2625	F	5,0	1,0	2,0	670	20	44	6485	82,0	1,00	592	94,1	94,1	94,5	0,57	0,69	0,76	402
350	260	6808/09	3063	G	5,5	1,0	2,0	727	20	44	6813	82,0	1,00	592	94,1	94,5	95,0	0,57	0,69	0,76	473
400	300	6808/09	3495	G	5,5	0,9	2,0	840	20	44	8134	82,0	1,00	593	94,1	94,5	95,0	0,59	0,69	0,76	545
450	330	7008/09	3918	F	5,5	0,8	1,9	1420	40	88	8536	82,0	1,00	595	94,5	95,0	95,0	0,61	0,71	0,77	592
500	370	7008/09	4354	F	5,5	0,8	1,9	1420	40	88	8714	82,0	1,00	595	94,5	95,0	95,4	0,61	0,71	0,77	661
550	400	7008/09	4789	F	5,5	0,8	1,9	1520	40	88	8977	82,0	1,00	595	95,0	95,4	95,8	0,61	0,71	0,77	712
600	440	7008/09	5224	F	5,5	0,8	1,9	1620	40	88	9464	82,0	1,00	595	95,4	95,4	95,8	0,61	0,71	0,77	783
650	480	7008/09	5660	F	5,5	0,8	1,9	1730	40	88	9746	82,0	1,00	595	95,4	95,4	95,8	0,62	0,72	0,78	843
700	515	7008/09	6095	F	5,5	0,8	1,9	1830	40	88	9951	82,0	1,00	595	95,4	95,8	95,8	0,62	0,72	0,78	904
750	560	7008/09	6531	F	5,5	0,8	1,9	1930	40	88	10533	82,0	1,00	595	95,4	95,8	96,2	0,62	0,72	0,78	979

Note: 1) Temperature rise ΔT 105 K.

14. Electrical Data

14.2 W50 - High Voltage - 1.2 kV to 5.0 kV

Output		Frame	Full Load Torque (ft.lb)	Locked Rotor Current		Locked Rotor Torque Tl/Tn	Break-down Torque Tb/Tn	Inertia J (sq.ft.lb)	Allowable locked rotor time (s)		Weight (lb)	Sound dB(A)	Service Factor	4160 V							
														Rated speed (rpm)	% of full load						Full load current In (A)
															Efficiency			Power Factor			
HP	kW			Code	Il/In				Hot	Cold					50	75	100	50	75	100	
II Poles																					
200	150	5009/10	290	H	7,3	1,1	2,2	64,3	20	44	3484	79,0	1,00	3576	91,4	92,7	93,6	0,83	0,87	0,88	25,3
250	185	5009/10	362	H	7,3	1,1	2,2	71,6	20	44	3484	79,0	1,00	3576	92,4	93,6	95,0	0,83	0,87	0,89	30,4
300	220	5009/10	435	H	7,3	1,1	2,2	77,2	18	40	3594	79,0	1,00	3577	93,6	94,1	95,0	0,83	0,88	0,89	36,1
350	260	5009/10	507	H	7,3	1,1	2,2	82,3	17	37	3682	79,0	1,00	3577	93,6	94,5	95,0	0,84	0,88	0,89	42,7
400	300	5009/10*	579	H	7,4	1,1	2,2	93,6	17	37	3859	79,0	1,00	3577	94,1	94,5	95,0	0,84	0,88	0,89	49,2
450	330	5809/10	653	H	7,5	1,0	2,4	133	20	44	4851	82,0	1,00	3570	94,5	95,0	95,4	0,83	0,89	0,90	53,3
500	370	5809/10	726	H	7,5	1,0	2,4	142	20	44	5182	82,0	1,00	3570	94,5	95,0	95,4	0,84	0,89	0,90	59,8
550	400	5809/10	798	G	6,9	1,0	2,4	154	20	44	5182	82,0	1,00	3570	95,0	95,4	95,4	0,84	0,89	0,90	64,7
600	440	6806/07	869	G	6,9	0,9	2,2	229	20	44	6328	82,0	1,00	3577	95,0	95,4	95,8	0,83	0,88	0,89	71,6
650	480	6808/09	941	G	6,9	0,9	2,2	248	20	44	6858	82,0	1,00	3577	95,0	95,4	95,8	0,83	0,87	0,89	78,1
700	515	6808/09	1014	G	6,6	0,9	2,2	249	20	44	6990	82,0	1,00	3577	95,0	95,4	95,8	0,84	0,87	0,89	83,8
750	560	6808/09	1086	G	6,5	0,9	2,2	248	20	44	7100	82,0	1,00	3577	95,4	95,8	95,8	0,84	0,87	0,89	91,2
800	590	6808/09	1159	G	6,6	0,9	2,2	269	20	44	7254	82,0	1,00	3577	95,4	95,8	95,8	0,84	0,87	0,89	96,0
850	630	7006/07	1228	G	6,9	0,7	2,3	447	25	55	8908	82,0	1,00	3585	95,0	95,4	95,8	0,84	0,89	0,89	103
900	660	7006/07	1300	H	7,5	0,7	2,4	483	25	55	9217	82,0	1,00	3586	95,4	95,8	95,8	0,84	0,89	0,90	106
950	700	7008/09	1373	G	6,9	0,7	2,4	519	25	55	9702	82,0	1,00	3585	95,4	95,8	95,8	0,84	0,89	0,90	113
1000	750	7008/09	1446	H	7,4	0,7	2,5	519	25	55	10011	82,0	1,00	3584	95,4	95,8	95,8	0,84	0,89	0,90	121
1100	800	7008/09	1590	G	6,9	0,7	2,5	555	25	55	10319	82,0	1,00	3584	95,8	95,8	96,2	0,84	0,89	0,90	128
1250	900	7008/09	1807	G	6,9	0,7	2,5	591	20	44	10650	82,0	1,00	3584	95,8	95,8	96,2	0,84	0,89	0,90	144
1350	1000	7008/09*	1951	G	6,9	0,7	2,5	593	20	44	10981	82,0	1,00	3585	95,8	96,2	96,2	0,84	0,89	0,90	160
IV Poles																					
250	185	5009/10	726	G	6,7	1,5	2,1	95,2	20	44	3484	79,0	1,00	1784	93,0	93,6	94,1	0,70	0,81	0,84	32,5
300	220	5009/10	871	G	6,7	1,4	2,2	115	19	42	3616	79,0	1,00	1784	93,0	94,1	95,0	0,71	0,81	0,84	38,3
350	260	5009/10	1018	G	6,7	1,4	2,1	121	19	42	3704	79,0	1,00	1782	93,6	94,5	95,0	0,71	0,81	0,84	45,2
400	300	5009/10	1161	H	6,9	1,5	2,3	145	18	40	4013	79,0	1,00	1785	93,6	94,5	95,0	0,73	0,81	0,84	52,2
450	330	5809/10	1305	G	6,2	1,4	2,2	237	30	66	5270	82,0	1,00	1787	94,1	95,0	95,0	0,75	0,80	0,84	57,4
500	370	5809/10	1450	G	6,2	1,4	2,2	256	25	55	5424	82,0	1,00	1787	94,1	95,0	95,4	0,75	0,80	0,84	64,1
550	400	5809/10	1594	H	7,0	1,5	2,3	275	25	55	5601	82,0	1,00	1788	94,1	95,0	95,4	0,74	0,80	0,84	69,3
600	440	6806/07	1739	G	6,2	1,4	2,3	345	25	55	6174	82,0	1,00	1788	94,5	95,4	95,4	0,73	0,82	0,85	75,3
650	480	6806/07	1883	G	6,2	1,4	2,3	366	25	55	6328	82,0	1,00	1788	94,5	95,4	95,4	0,75	0,82	0,85	82,2
700	515	6806/07	2028	G	6,2	1,4	2,3	386	25	55	6836	82,0	1,00	1788	94,5	95,4	95,8	0,75	0,82	0,85	87,8
750	560	6808/09	2171	G	6,6	1,4	2,3	463	25	55	7585	82,0	1,00	1790	94,5	95,4	95,8	0,73	0,81	0,84	96,6
800	590	6808/09	2315	G	6,6	1,4	2,4	463	20	44	7585	82,0	1,00	1790	95,0	95,4	95,8	0,72	0,80	0,84	102
850	630	6808/09	2459	G	6,6	1,4	2,4	498	20	44	7629	82,0	1,00	1791	95,0	95,4	95,8	0,72	0,80	0,84	109
900	660	6808/09	2605	H	7,0	1,4	2,4	570	20	44	7784	82,0	1,00	1790	95,0	95,4	95,8	0,72	0,80	0,84	114
950	700	7006/07	2748	G	6,7	0,7	2,4	586	25	55	9107	82,0	1,00	1791	95,0	95,8	95,8	0,77	0,82	0,84	121
1000	750	7006/07	2894	G	6,4	0,7	2,3	683	25	55	9217	82,0	1,00	1790	95,0	95,8	96,2	0,77	0,82	0,84	129
1100	800	7008/09	3184	F	6,2	0,7	2,5	630	25	55	9967	82,0	1,00	1790	95,4	95,8	96,2	0,77	0,84	0,87	133
1250	900	7008/09	3618	F	6,4	0,7	2,5	683	25	55	10011	82,0	1,00	1790	95,4	96,2	96,2	0,75	0,84	0,87	149
1350	1000	7008/09	3905	G	6,4	0,7	2,5	728	20	44	10319	82,0	1,00	1791	95,8	96,2	96,2	0,75	0,84	0,87	166
1500	1100	7008/09*	4337	G	6,4	0,7	2,5	810	20	44	10584	82,0	1,00	1792	95,8	96,2	96,2	0,74	0,83	0,86	185

Note: 1) Temperature rise ΔT 105 K.

14. Electrical Data

14.2 W50 - High Voltage - 1.2 kV to 5.0 kV

Output		Frame	Full Load Torque (ft.lb)	Locked Rotor Current		Locked Rotor Torque Tl/Tn	Break-down Torque Tb/Tn	Inertia J (sq.ft.lb)	Allowable locked rotor time (s)		Weight (lb)	Sound dB(A)	Service Factor	4160 V							
														Rated speed (rpm)	% of full load						Full load current In (A)
															Efficiency			Power Factor			
HP	kW			Code	Il/In				Hot	Cold					50	75	100	50	75	100	
VI Poles																					
250	185	5009/10	1089	H	6,5	1,1	2,4	143	21	46	3881	77,0	1,00	1189	93,0	93,0	93,6	0,64	0,74	0,79	34,7
300	220	5009/10	1312	H	6,5	1,8	2,4	159	24	53	4190	77,0	1,00	1185	93,0	93,0	93,6	0,64	0,74	0,79	41,3
350	260	5809/10	1530	H	6,5	1,7	2,4	293	18	40	5336	77,0	1,00	1185	93,6	94,1	95,0	0,65	0,74	0,80	47,5
400	300	5809/10	1741	H	6,5	1,8	2,4	304	18	40	5645	77,0	1,00	1190	94,1	94,5	95,0	0,65	0,74	0,80	54,8
450	330	5809/10	1966	G	6,5	1,5	2,4	322	18	40	5645	77,0	1,00	1186	94,1	94,5	95,0	0,65	0,74	0,80	60,3
500	370	5809/10*	2181	J	7,3	1,7	2,4	351	18	40	5777	77,0	1,00	1188	94,1	94,5	95,0	0,65	0,74	0,80	67,6
550	400	6806/07	2389	G	6,5	1,0	2,2	510	25	55	6615	81,0	1,00	1193	94,5	95,0	95,4	0,70	0,78	0,83	70,1
600	440	6806/07	2608	G	6,5	1,0	2,2	508	25	55	6615	81,0	1,00	1192	94,5	95,4	95,4	0,73	0,81	0,84	76,2
650	480	6806/07	2825	G	6,5	1,0	2,2	556	25	55	7188	81,0	1,00	1192	95,0	95,4	95,4	0,73	0,81	0,84	83,1
700	515	6808/09	3042	G	6,5	1,0	2,2	556	20	44	7497	81,0	1,00	1192	95,0	95,4	95,8	0,73	0,81	0,84	88,8
750	560	6808/09	3260	G	6,5	1,0	2,2	601	20	44	7497	81,0	1,00	1192	95,0	95,4	95,8	0,73	0,81	0,84	96,6
800	590	6808/09	3477	J	7,4	1,4	2,3	603	20	44	7894	81,0	1,00	1192	95,0	95,8	95,8	0,65	0,77	0,80	107
850	630	7006/07	3694	H	6,9	1,0	2,4	770	25	55	9107	81,0	1,00	1192	95,4	95,8	96,2	0,66	0,77	0,82	111
900	660	7006/07	3912	G	6,9	1,0	2,4	823	25	55	10121	81,0	1,00	1192	95,4	95,8	96,2	0,67	0,77	0,84	113
950	700	7008/09	4129	G	6,9	0,7	2,4	823	25	55	10606	81,0	1,00	1192	95,8	96,2	96,2	0,67	0,77	0,84	120
1000	750	7008/09	4346	H	6,9	0,7	2,4	877	25	55	10628	81,0	1,00	1192	95,8	96,2	96,2	0,67	0,80	0,84	129
1100	800	7008/09	4777	G	6,9	0,7	2,4	931	25	55	10650	81,0	1,00	1193	95,8	96,2	96,2	0,67	0,80	0,84	137
1250	900	7008/09	5428	G	6,5	0,7	2,4	931	20	44	11312	81,0	1,00	1193	95,8	96,2	96,5	0,70	0,78	0,83	156
1350	1000	7008/09*	5863	G	6,5	0,7	2,4	1010	20	44	11312	81,0	1,00	1193	95,8	96,2	96,5	0,73	0,78	0,83	173
VIII Poles																					
175	132	5009/10	1021	J	6,7	1,2	2,5	212	12	26	3859	75,0	1,00	888	92,2	92,7	92,7	0,58	0,69	0,76	26,0
200	150	5009/10	1166	J	6,7	1,2	2,5	239	12	26	3969	75,0	1,00	889	92,4	93,0	93,0	0,52	0,65	0,75	29,8
250	185	5009/10	1457	J	6,7	1,3	2,5	261	12	26	4057	75,0	1,00	889	92,5	93,0	93,0	0,52	0,64	0,72	38,3
300	220	5809/10	1744	H	6,4	1,3	2,2	440	22	48	5733	75,0	1,00	891	94,2	94,7	94,7	0,60	0,71	0,75	43,0
350	260	5809/10	2035	H	6,4	1,3	2,2	440	22	48	5733	75,0	1,00	891	94,2	94,7	94,7	0,60	0,71	0,75	50,8
400	300	5809/10	2326	H	6,4	1,3	2,2	551	22	48	5931	75,0	1,00	891	94,1	94,5	95,0	0,60	0,70	0,76	57,7
450	330	6806/07	2617	G	6,4	1,0	2,3	727	22	48	7188	79,0	1,00	891	95,0	95,0	95,0	0,70	0,79	0,82	58,8
500	370	6808/09	2907	H	6,6	1,3	2,3	708	22	48	7056	79,0	1,00	891	94,5	95,0	95,0	0,65	0,75	0,80	67,6
600	440	6808/09	3489	G	6,4	1,2	2,3	764	22	48	7475	79,0	1,00	891	95,0	95,4	95,4	0,65	0,75	0,80	80,0
700	515	7006/07	4052	G	6,3	0,7	2,2	1140	26	57	10121	79,0	1,00	895	95,4	95,8	95,8	0,64	0,74	0,80	93,3
800	590	7006/07	4631	G	6,3	0,7	2,2	1220	26	57	10253	79,0	1,00	895	95,4	95,8	95,8	0,64	0,74	0,80	107
900	660	7008/09	5210	G	6,3	0,7	2,2	1220	26	57	11025	79,0	1,00	895	95,4	95,8	95,8	0,64	0,74	0,80	120
950	700	7008/09	5499	G	6,3	0,7	2,2	1300	30	66	11576	79,0	1,00	895	95,4	95,8	95,8	0,64	0,75	0,80	127
1000	750	7008/09*	5795	G	6,3	0,7	2,2	1380	30	66	11642	79,0	1,00	894	95,8	95,8	95,8	0,64	0,75	0,80	136

Note: 1) Temperature rise ΔT 105 K.

14. Electrical Data

14.2 W50 - High Voltage - 1.2 kV to 5.0 kV

Output		Frame	Full Load Torque (ft.lb)	Locked Rotor Current		Locked Rotor Torque Tl/Tn	Break-down Torque Tb/Tn	Inertia J (sq.ft.lb)	Allowable locked rotor time (s)		Weight (lb)	Sound dB(A)	Service Factor	4160 V							
														Rated speed (rpm)	% of full load						Full load current In (A)
															Efficiency			Power Factor			
HP	kW			Code	Il/In				Hot	Cold					50	75	100	50	75	100	
X Poles																					
175	132	5809/10	1277	J	5,5	1,2	2,2	440	11	24	5292	75,0	1,00	710	91,3	92,5	92,7	0,43	0,55	0,63	31,4
200	150	5809/10	1459	H	5,5	1,9	2,2	477	11	24	5579	75,0	1,00	710	91,6	92,8	93,0	0,43	0,55	0,63	35,5
250	185	5809/10	1824	H	5,5	1,7	2,2	514	11	24	5733	75,0	1,00	710	91,8	93,0	93,2	0,44	0,56	0,64	43,0
300	220	5809/10	2189	H	5,5	1,7	2,2	551	11	24	5843	75,0	1,00	710	92,1	93,3	93,5	0,44	0,56	0,64	51,0
350	260	6806/07	2543	G	5,5	0,9	2,0	613	28	62	6615	79,0	1,00	713	93,9	94,6	94,6	0,58	0,69	0,74	51,5
400	300	6806/07	2907	G	5,5	0,9	2,0	670	28	62	6836	79,0	1,00	713	94,1	94,8	94,8	0,58	0,69	0,74	59,4
450	330	6806/07*	3270	G	5,5	0,9	2,0	784	28	62	7277	79,0	1,00	713	94,3	95,0	95,0	0,59	0,70	0,75	64,3
500	370	6808/09	3633	G	5,5	0,9	2,0	897	28	62	7718	79,0	1,00	713	94,5	95,2	95,2	0,59	0,70	0,75	71,9
550	400	6808/09	3996	F	5,5	0,9	2,0	1010	28	62	9482	79,0	1,00	713	94,7	95,4	95,4	0,60	0,71	0,76	76,6
600	440	7006/07	4360	F	5,5	0,9	2,0	1140	31	68	8820	79,0	1,00	713	95,1	95,4	95,4	0,66	0,76	0,80	80,0
650	480	7006/07	4723	F	5,5	0,9	2,0	1220	31	68	9107	79,0	1,00	713	95,2	95,5	95,5	0,66	0,76	0,80	87,2
700	515	7006/07	5086	F	5,5	0,9	2,0	1220	31	68	9371	79,0	1,00	713	95,3	95,6	95,6	0,66	0,76	0,80	93,5
750	560	7006/07	5450	F	5,5	0,9	2,0	1300	31	68	9923	79,0	1,00	713	95,5	95,8	95,8	0,66	0,76	0,80	101
800	590	7006/07	5813	F	5,5	0,9	2,0	1380	31	68	10364	79,0	1,00	713	95,6	95,9	95,9	0,66	0,76	0,80	107
850	630	7006/07	6176	F	5,5	0,9	2,0	1380	31	68	10584	79,0	1,00	713	95,7	96,0	96,0	0,66	0,76	0,80	114
XII Poles																					
175	132	6806/07	1526	G	5,5	1,1	2,3	613	25	55	6615	79,0	1,00	594	91,9	93,4	93,4	0,51	0,64	0,71	27,6
200	150	6806/07	1744	G	5,5	1,1	2,3	670	25	55	6836	79,0	1,00	594	92,2	93,6	93,6	0,51	0,64	0,71	31,3
250	185	6806/07	2181	G	5,5	1,1	2,3	727	25	55	7056	79,0	1,00	594	92,5	93,8	93,8	0,51	0,64	0,71	38,6
300	220	6806/07	2617	G	5,5	1,1	2,3	784	25	55	7166	79,0	1,00	594	92,8	94,2	94,2	0,51	0,64	0,71	45,7
350	260	6806/07	3053	G	5,5	1,1	2,3	840	25	55	7387	79,0	1,00	594	93,1	94,4	94,4	0,51	0,64	0,71	53,8
400	300	7006/07	3495	H	5,5	1,0	2,0	1140	50	110	8600	79,0	1,00	593	93,9	94,8	94,8	0,48	0,60	0,67	65,6
450	330	7006/07	3932	H	5,5	1,0	2,0	1220	50	110	9151	79,0	1,00	593	94,1	95,0	95,0	0,48	0,60	0,67	72,0
500	370	7006/07	4368	H	5,5	1,0	2,0	1300	50	110	9702	79,0	1,00	593	94,3	95,2	95,2	0,48	0,60	0,67	80,5
550	400	7006/07	4805	G	5,5	1,0	2,0	1380	50	110	10364	79,0	1,00	593	94,5	95,4	95,4	0,48	0,60	0,67	86,9

Note: 1) Temperature rise ΔT 105 K.

14. Electrical Data

14.3 W50 - High Voltage - 5.1 kV to 6.6 kV

Output		Frame	Full Load Torque (ft.lb)	Locked Rotor Current		Locked Rotor Torque Tl/Tn	Break-down Torque Tb/Tn	Inertia J (sq. ft.lb)	Allowable locked rotor time (s)		Weight (lb)	Sound dB(A)	Service Factor	6600 V							
														Rated speed (rpm)	% of full load						Full load current In (A)
															Efficiency			Power Factor			
HP	kW			Code	Il/In				Hot	Cold					50	75	100	50	75	100	
II Poles																					
250	185	5009/10	362	G	6,7	0,9	2,2	80,0	25	55	3572	79,0	1,00	3577	93,0	93,6	94,5	0,84	0,88	0,89	19,2
300	220	5009/10	435	G	6,7	1,0	2,2	85,7	20	44	3704	79,0	1,00	3577	93,0	94,1	94,5	0,84	0,88	0,89	22,9
350	260	5809/10	507	G	6,5	1,0	2,4	123	25	55	4818	82,0	1,00	3574	93,6	94,5	95,0	0,85	0,89	0,89	26,9
400	300	5809/10	580	H	7,2	1,0	2,4	131	25	55	4928	82,0	1,00	3574	94,1	95,0	95,0	0,85	0,89	0,89	31,0
450	330	6806/07	651	G	6,5	0,9	2,5	212	25	55	5954	82,0	1,00	3580	93,6	95,0	95,4	0,84	0,87	0,89	34,0
500	370	6806/07	724	G	6,6	0,9	2,5	226	25	55	6108	82,0	1,00	3580	94,1	95,0	95,4	0,85	0,88	0,89	38,1
550	400	6808/09	796	G	6,6	0,9	2,5	239	25	55	6604	82,0	1,00	3580	94,5	95,4	95,4	0,85	0,88	0,89	41,2
600	440	6808/09	868	G	6,6	0,9	2,5	261	25	55	6791	82,0	1,00	3580	95,0	95,8	95,8	0,85	0,89	0,90	44,6
650	480	6808/09	941	G	6,6	0,9	2,5	270	20	44	6957	82,0	1,00	3579	95,4	95,8	95,8	0,85	0,89	0,90	48,7
700	515	6808/09	1013	H	7,4	0,9	2,5	283	20	44	7056	82,0	1,00	3579	95,4	95,8	95,8	0,86	0,89	0,90	52,3
750	560	6808/09	1086	H	7,4	0,9	2,5	283	20	44	7188	82,0	1,00	3579	95,4	95,8	95,8	0,86	0,89	0,90	56,8
800	590	7006/07	1156	G	6,6	0,8	2,6	477	25	55	8886	82,0	1,00	3585	95,4	95,8	95,8	0,87	0,89	0,90	59,9
850	630	7008/09	1228	G	6,6	0,8	2,6	514	25	55	9878	82,0	1,00	3585	95,4	95,8	95,8	0,87	0,89	0,90	63,9
900	660	7008/09	1301	G	6,6	0,8	2,6	551	25	55	9856	82,0	1,00	3585	95,4	95,8	95,8	0,87	0,89	0,90	67,0
950	700	7008/09	1373	G	6,6	0,8	2,6	551	20	44	9989	82,0	1,00	3585	95,4	95,8	95,8	0,87	0,89	0,90	71,0
1000	750	7008/09	1445	G	6,8	0,8	2,6	589	20	44	10187	82,0	1,00	3585	95,4	95,8	95,8	0,87	0,90	0,90	76,1
1100	800	7008/09	1590	G	7,3	0,8	2,6	626	20	44	10319	82,0	1,00	3585	95,8	96,2	96,2	0,85	0,90	0,90	80,8
1250	900	7008/09*	1806	G	7,3	0,8	2,6	626	20	44	10452	82,0	1,00	3585	95,8	96,2	96,2	0,85	0,90	0,90	90,9
IV Poles																					
250	185	5009/10	725	H	6,8	1,1	2,4	106	20	44	3506	79,0	1,00	1786	92,4	93,0	93,6	0,70	0,79	0,83	20,8
300	220	5009/10	871	H	6,8	1,1	2,4	115	20	44	3660	79,0	1,00	1785	92,4	93,0	93,6	0,71	0,80	0,83	24,8
350	260	5009/10	1016	H	6,8	1,1	2,4	131	20	44	3881	79,0	1,00	1785	93,0	94,1	94,1	0,71	0,80	0,84	28,8
400	300	5809/10	1159	H	6,9	1,4	2,2	226	25	55	5072	82,0	1,00	1788	93,6	94,5	95,0	0,73	0,80	0,85	32,5
450	330	5809/10	1304	G	6,9	1,4	2,2	239	25	55	5259	82,0	1,00	1788	94,1	94,5	95,0	0,73	0,80	0,85	35,7
500	370	5809/10	1448	H	6,8	1,4	2,2	261	20	44	5358	82,0	1,00	1789	94,1	94,5	95,0	0,73	0,80	0,84	40,6
550	400	6806/07	1593	G	6,8	1,0	2,2	380	25	55	6262	82,0	1,00	1789	94,1	95,0	95,4	0,74	0,82	0,85	43,2
600	440	6806/07	1737	G	6,8	1,0	2,2	402	25	55	6395	82,0	1,00	1790	94,1	95,0	95,4	0,73	0,82	0,85	47,5
650	480	6808/09	1881	H	6,8	1,2	2,3	440	25	55	7001	82,0	1,00	1790	94,5	95,0	95,4	0,73	0,82	0,83	53,0
700	515	6808/09	2026	H	6,8	1,2	2,3	477	25	55	7210	82,0	1,00	1790	94,5	95,4	95,4	0,73	0,82	0,83	56,9
750	560	6808/09	2171	H	6,8	1,2	2,3	514	25	55	7453	82,0	1,00	1790	95,0	95,4	95,8	0,73	0,82	0,83	61,6
800	590	6808/09	2315	H	6,8	1,3	2,3	551	25	55	7695	82,0	1,00	1790	95,0	95,8	95,8	0,73	0,82	0,83	64,9
850	630	7006/07	2460	G	6,3	0,7	2,5	617	30	66	8952	82,0	1,00	1790	94,5	95,4	95,8	0,76	0,82	0,84	68,5
900	660	7006/07	2603	G	6,3	0,7	2,5	666	30	66	9107	82,0	1,00	1791	94,5	95,4	95,8	0,76	0,82	0,84	71,7
950	700	7008/09	2748	G	6,3	0,7	2,5	666	25	55	9151	82,0	1,00	1791	95,0	95,4	95,8	0,76	0,84	0,84	76,1
1000	750	7008/09	2894	G	6,4	0,6	2,3	666	25	55	9923	82,0	1,00	1790	95,0	95,8	95,8	0,77	0,84	0,84	81,5
1100	800	7008/09	3184	G	6,4	0,7	2,5	714	25	55	10187	82,0	1,00	1790	95,4	95,8	95,8	0,77	0,84	0,86	84,9
1250	900	7008/09	3618	F	6,4	0,7	2,5	762	20	44	10430	82,0	1,00	1790	95,4	95,8	96,2	0,77	0,84	0,86	95,2
1350	1000	7008/09*	3903	G	7,0	0,8	2,5	762	20	44	10606	82,0	1,00	1792	95,8	96,2	96,2	0,77	0,84	0,86	106

Note: 1) Temperature rise ΔT 105 K.

14. Electrical Data

14.3 W50 - High Voltage - 5.1 kV to 6.6 kV

Output		Frame	Full Load Torque (ft.lb)	Locked Rotor Current		Locked Rotor Torque Tl/Tn	Break-down Torque Tb/Tn	Inertia J (sq. ft.lb)	Allowable locked rotor time (s)		Weight (lb)	Sound dB(A)	Service Factor	6600 V							
														Rated speed (rpm)	% of full load						Full load current In (A)
															Efficiency			Power Factor			
HP	kW			Code	Il/In				Hot	Cold					50	75	100	50	75	100	
VI Poles																					
250	185	5809/10	1088	H	6,5	1,5	2,4	254	20	44	4807	77,0	1,00	1190	93,0	93,6	94,1	0,59	0,71	0,77	22,3
300	220	5809/10	1306	H	6,5	1,5	2,4	271	20	44	4917	77,0	1,00	1190	93,0	93,6	94,5	0,66	0,75	0,77	26,4
350	260	5809/10	1524	H	6,5	1,5	2,3	288	20	44	5027	77,0	1,00	1190	93,0	94,1	94,5	0,66	0,75	0,78	30,9
400	300	5809/10	1741	J	7,3	1,4	2,3	334	20	44	5513	77,0	1,00	1190	93,0	94,1	94,5	0,60	0,72	0,78	35,6
450	330	6806/07	1956	G	6,6	1,0	2,3	440	5	11	6505	81,0	1,00	1192	94,5	95,0	95,0	0,70	0,78	0,81	37,5
500	370	6806/07	2173	H	6,6	1,0	2,3	380	5	11	6505	81,0	1,00	1192	94,5	95,0	95,0	0,70	0,78	0,81	42,1
550	400	6808/09	2391	H	6,6	1,0	2,3	402	25	55	7387	81,0	1,00	1192	94,5	95,0	95,0	0,70	0,78	0,80	46,0
600	440	6808/09	2606	H	6,6	1,0	2,4	440	25	55	7387	81,0	1,00	1193	94,5	95,4	95,4	0,70	0,78	0,80	50,4
650	480	6808/09	2825	H	6,6	1,0	2,4	477	25	55	7497	81,0	1,00	1192	95,0	95,4	95,4	0,70	0,78	0,80	55,0
700	515	7006/07	3042	G	6,7	0,9	2,5	670	25	55	8600	81,0	1,00	1192	95,4	95,8	95,8	0,70	0,80	0,82	57,3
750	560	7006/07	3260	H	6,7	0,9	2,5	670	25	55	9151	81,0	1,00	1192	95,4	95,8	95,8	0,70	0,80	0,82	62,4
800	590	7008/09	3477	G	6,7	0,9	2,5	727	25	55	9129	81,0	1,00	1192	95,4	95,8	95,8	0,70	0,80	0,82	65,7
850	630	7008/09	3694	H	6,7	0,9	2,4	784	25	55	9437	81,0	1,00	1192	95,4	95,8	95,8	0,70	0,80	0,82	70,2
900	660	7008/09	3912	G	6,7	0,9	2,4	784	25	55	9437	81,0	1,00	1192	95,4	95,8	95,8	0,71	0,80	0,82	73,5
950	700	7008/09	4129	G	6,7	0,7	2,4	840	25	55	9834	81,0	1,00	1192	95,4	95,8	95,8	0,72	0,81	0,85	75,2
1000	750	7008/09	4346	G	6,7	0,7	2,4	840	25	55	10617	81,0	1,00	1192	95,4	95,8	96,2	0,73	0,82	0,85	80,2
1100	800	7008/09*	4777	G	6,7	0,7	2,4	897	25	55	10617	81,0	1,00	1193	95,4	95,8	96,2	0,73	0,82	0,85	85,6
VIII Poles																					
200	150	5809/10	1163	G	5,6	1,2	2,2	313	20	44	4675	75,0	1,00	891	93,0	93,6	93,6	0,62	0,73	0,78	18,0
250	185	5809/10	1454	G	5,6	1,2	2,2	380	20	44	4829	75,0	1,00	891	93,6	93,6	94,1	0,62	0,73	0,78	22,0
300	220	5809/10	1744	H	6,0	1,2	2,2	477	20	44	5270	75,0	1,00	891	93,6	94,1	94,1	0,55	0,67	0,72	28,4
350	260	5809/10	2035	J	6,7	1,2	2,2	477	20	44	5446	75,0	1,00	891	93,6	94,1	94,5	0,55	0,67	0,72	33,4
400	300	6808/09	2331	G	6,3	1,3	2,3	670	19	42	7210	79,0	1,00	889	94,1	94,5	94,6	0,65	0,75	0,80	34,7
450	330	6808/09	2622	G	6,3	1,1	2,3	784	19	42	7607	79,0	1,00	889	94,3	94,8	94,8	0,65	0,75	0,80	38,1
500	370	6808/09	2911	G	6,4	1,1	2,3	840	19	42	7938	79,0	1,00	890	94,5	95,0	95,0	0,65	0,75	0,80	42,6
600	440	7006/07	3493	G	5,9	0,9	2,2	989	19	42	8732	79,0	1,00	890	94,8	95,4	95,4	0,65	0,75	0,79	51,1
700	515	7008/09	4052	F	5,9	0,7	2,2	1220	27	59	10529	79,0	1,00	895	95,0	95,8	95,8	0,67	0,77	0,81	58,1
800	590	7008/09	4631	G	5,9	0,7	2,2	1220	27	59	10738	79,0	1,00	895	95,0	95,8	95,8	0,67	0,77	0,81	66,5
850	630	7008/09*	4920	G	5,9	0,7	2,2	1300	27	59	10915	79,0	1,00	895	95,0	95,8	95,8	0,67	0,77	0,81	71,0
900	660	7008/09*	5210	G	5,9	0,7	2,2	1380	27	59	11190	79,0	1,00	895	95,4	95,8	96,2	0,64	0,74	0,80	75,0

Note: 1) Temperature rise ΔT 105 K.

15. Mechanical Data

15.1 Frames 5009/10 to 7008/09

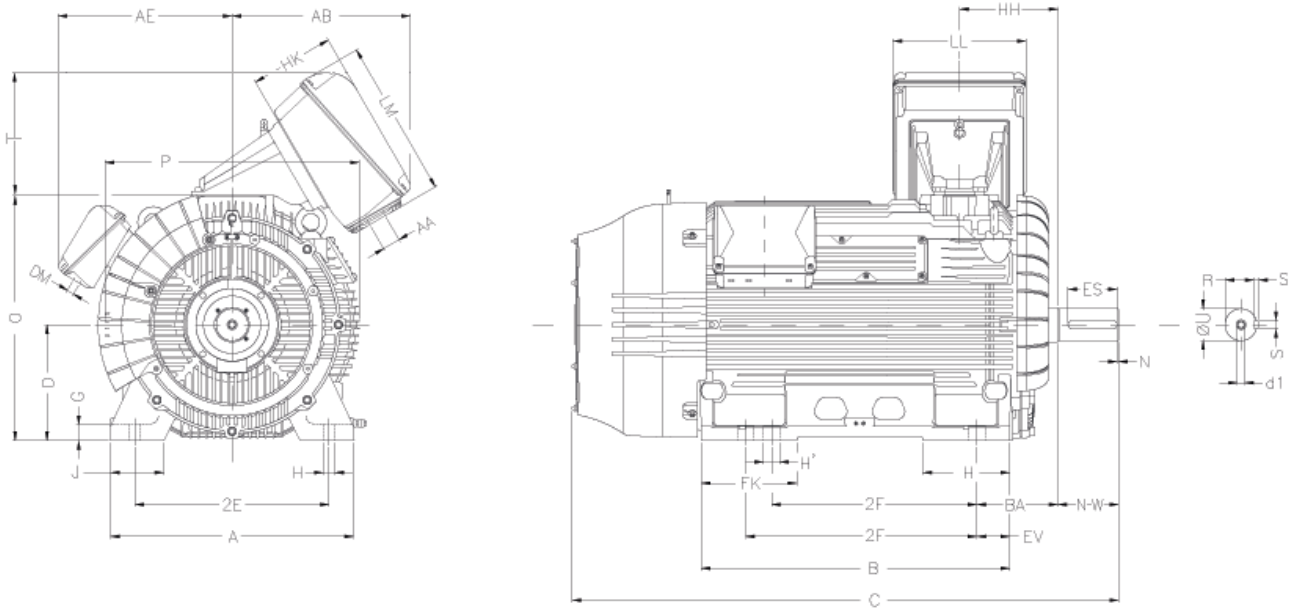

Frame	N° poles	2E	J	A	P	AB	AE	2F	K	B	FK	EV	C	Shaft end					
														U	N-W	ES	N	S	R
5009/10	2	20.000	5.276	24.725	27.795	26.133[1]	21.343	28.000/ 32.000	11.120	35.585	11.120	3.150	64.159	2.375	4.750	4.330	0.197	0.625	2.021
	4/6/8												70.035	3.625	10.625	9.055		0.875	3.134
5809/10	2	23.000	5.793	29.528	31.102		22.397	32.000/ 36.000	11.596	42.415	11.596	3.583	71.089	2.375	4.750	4.330		0.625	2.021
	4/6/8												77.964	3.875	11.625	9.842		1.000	3.309
6806/07	2	27.000	7.050	33.071	34.646	34.987	23.697	28.000/ 32.000	11.740	42.226	12.921	4.575	72.348	3.250	5.750	4.330		0.750	2.831
	4/6/8												78.224	4.375	11.625	9.449		1.000	3.817
6808/09	2							36.000/ 40.000		48.126	11.737		78.254	3.250	5.750	4.330		0.750	2.831
	4/6/8												84.129	4.375	11.625	9.449		1.000	3.817
7006/07	2	30.000	8.145	37.008	38.740		24.348	32.000/ 36.000	13.841	48.728	15.219	5.157	79.742	3.375	6.750	5.512		0.875	2.880
	4/6/8												84.617	5.125	11.625	9.842		1.250	4.423
7008/09	2							40.000/ 45.000		54.633	13.841		85.648	3.375	6.750	5.512		0.875	2.880
	4/6/8												90.523	5.125	11.625	9.842		1.250	4.423

Frame	N° poles	D	G	O	T	HH	HK	H	H'	BA	LL	LM	d1	AA [2]	DM	Bearings	
																DE	NDE
5009/10	2	12.500	2.073	26.083	16.650	12.628	11.410[1]	1.181	1.575	8.500	18.110[1]	28.734[1]	UNC3/4"-10	2xNPT 3"	3xNPT 3/4"	6314 C3	6314 C3
	4/6/8												UNC7/8"-9			6320 C3	6316 C3
5809/10	2	14.500	1.974	30.051		13.740			1.890	10.000			UNC3/4"-10	2xNPT 4"		6314 C3	6314 C3
	4/6/8												UNC7/8"-9			6322 C3	6319 C3
6806/07	2	17.000		34.520		13.862	18.805	1.417	2.205	11.500	21.850	32.874	UNC3/4"-10			6218 C3	6218 C3
	4/6/8												UNC 1"-8			6324 C3	6319 C3
6808/09	2												UNC3/4"-10			6218 C3	6218 C3
	4/6/8												UNC 1"-8			6324 C3	6319 C3
7006/07	2	17.500	2.467	36.870	16.647	13.780							UNC7/8"-9			6220 C3	6220 C3
	4/6/8												UNC 1.1/4"-7			6328 C3	6322 C3
7008/09	2												UNC7/8"-9			6220 C3	6220 C3
	4/6/8												UNC 1.1/4"-7			6328 C3	6322 C3

Note: 1) For motors with voltage 5.1 kV and above the dimension AB will be 34.987", dimension HK will be 18.805", dimension LL will be 21.850" and dimension LM will be 32.874" for frames 5009/10 and 5809/10.
2) For motors with voltage 1.2 kV and above the dimension AA will be NPT 3" for all frame sizes.

15. Mechanical Data

15.2 Flange "D"

Frame	Flange	BA	AJ	AK	BD	BF	BB	N° holes
5009/10	D-558	8.500	21.968	18.000	23.976	0.826	0.250	8
5809/10	D-762	10.000	30.000	28.000	32.008			
6806/07	D-895	11.500	35.236	33.250	37.244	1.000		
6808/09								
7006/07	FF-1080		42.520	39.370	45.276	1.102	0.236	
7008/09								

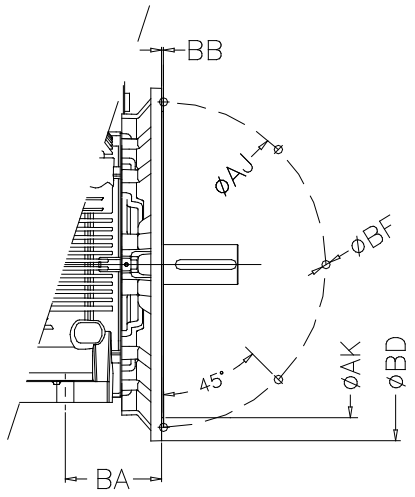

Utilization of sleeve bearing, forced ventilation and drip cover increases the total length of the motor. This additional length can be seen in the tables below.

15.3 Flange "C"

Frame	Flange	BA	AJ	AK	BD	BF	BB	N° holes
5009/10	FC-368	8.504	14.500	16.500	17.915	8xUNC 5/8"-11	0.500	8
5809/10	FC-368	10.000						
6806/07	FC-533	11.500	21.000	23.000	25.000	8xUNC 1"-8		

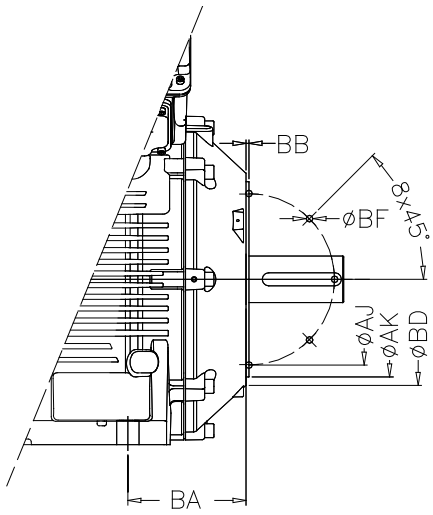

Utilization of sleeve bearing, forced ventilation and drip cover increases the total length of the motor.
This additional length can be seen in the tables below.

15.4 External Motor Dimensions with Steel Plate Terminal Box

Frame	Designation			
	Steel 1 and steel 2		Steel 11	
	AB	O+T	AB	O+T
5009/10	35.000	47.677	34.016	48.071
5809/10		51.220		51.614
6806/07		54.961		55.354
6808/09				
7006/07		58.780		59.173
7008/09				

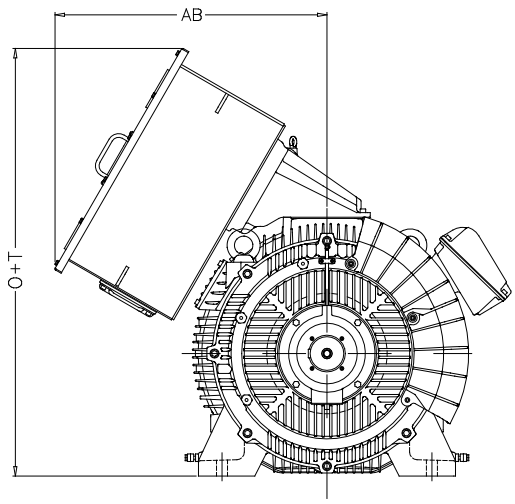

15.5 External Motor Dimensions with Sleeve Bearing

Frame	N° poles	BA	C
5009/10	2	14.764	75.715
	4 - 8		81.590
5809/10	2	16.732	82.407
	4 - 8		87.314
6806/07	2	17.717	84.569
	4 - 8		90.444
6808/09	2		90.474
	4 - 8		96.349
7006/07	2	17.799	94.789
	4 - 8		96.664
7008/09	2		97.695
	4 - 8		102.570

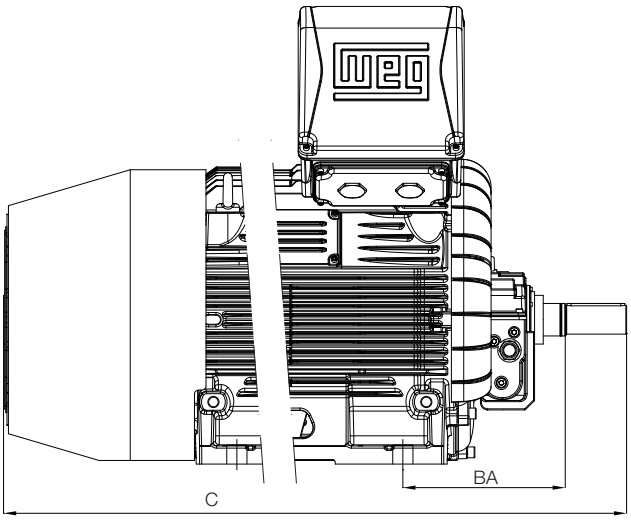

15.6 External Motor Dimensions with Forced Ventilation

Frame	N° poles	C
5009/10	2	72.900
	4 - 8	78.755
5809/10	2	79.809
	4 - 8	86.684
6806/07	2	81.069
	4 - 8	86.944
6808/09	2	86.975
	4 - 8	92.850
7006/07	2	88.463
	4 - 8	93.338
7008/09	2	94.368
	4 - 8	99.243

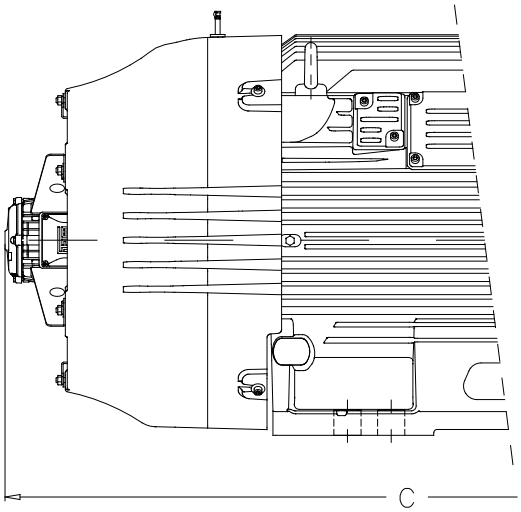

15.7 Drip Cover Height

Frame	CH (mm)
5009/10	3.563
5809/10	
6806/07	4.705
6808/09	
7006/07	
7008/09	

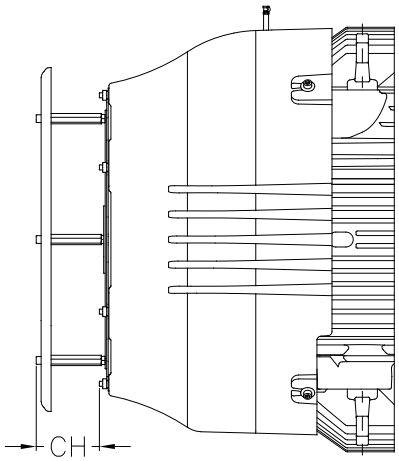

16. Terminal Boxes

The terminal boxes can be manufactured in cast iron FC-200, the same material used in the frame and endshields, or manufactured in steel plate. Below see the external dimensionals and some technical features.

16.1 Cast Iron Terminal Boxes

16.1.1 Iron 02

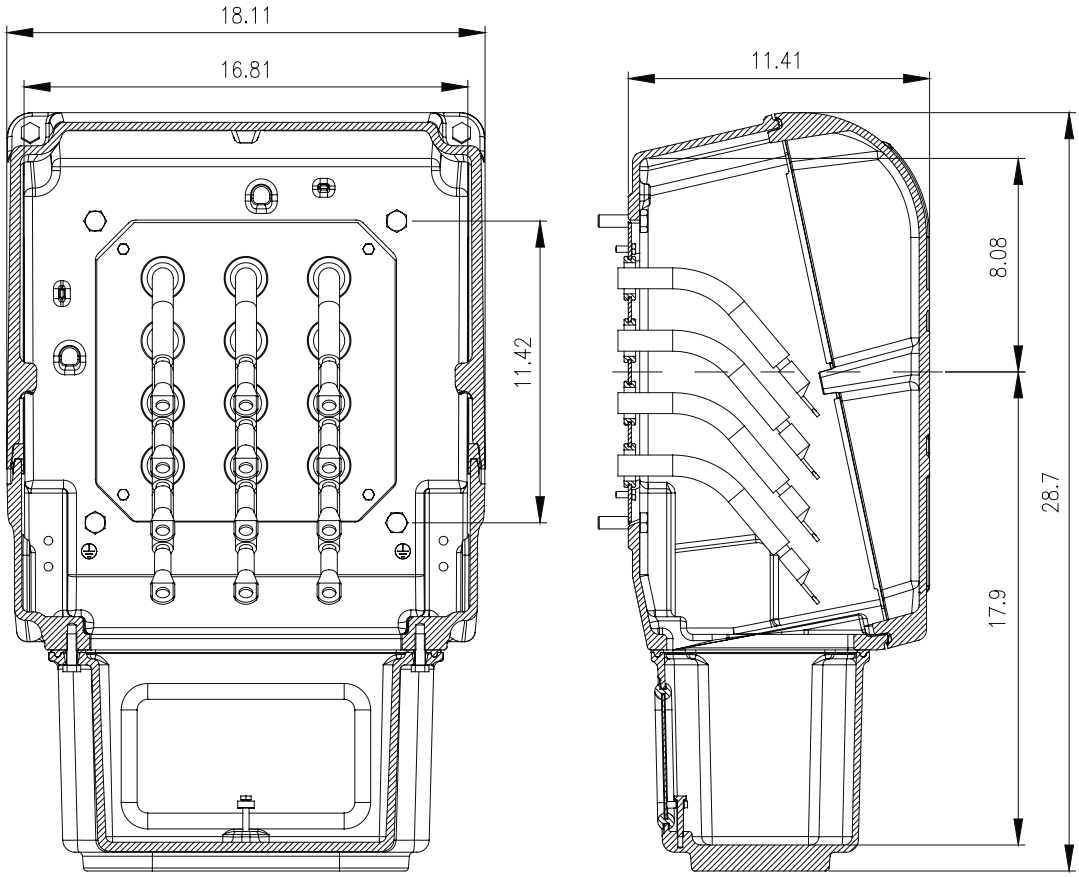

Technical data	
Maximum quantity of leads	4 per phase
Entry plates for leads designation	Type 02
Internal volume	3,978.7 in³
Grounding terminal	Internal
Approximate weight	154.3 lb
Degree of protection	IP66
General data	
Minimum teminal box thickness	0.275 in
Rotate in steps of 90°	Yes
Pressure relief device in the back of the terminal box in case of short circuit	

16.1.2 Iron 04

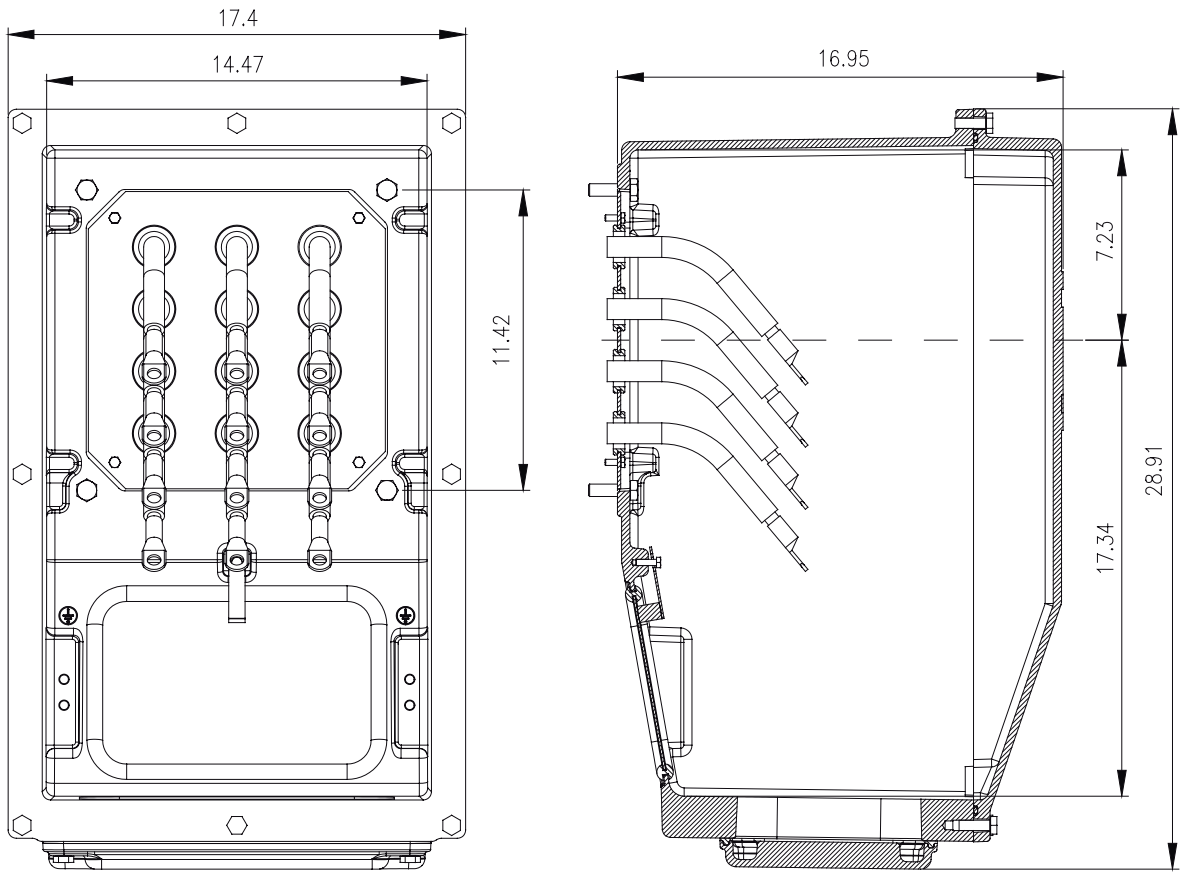

Technical data	
Maximum quantity of leads	4 per phase
Entry plates for leads designation	Type 01
Internal volume	5,644.7 in³
Grounding terminal	Internal
Approximate weight	231.5 lb
Degree of protection	IP66
General data	
Minimum teminal box thickness	0.315 in
Rotate in steps of 90°	Yes
Pressure relief device in the back of the terminal box in case of short circuit	

16. Terminal Boxes

16.2 Steel Plate Terminal Boxes

16.2.1 Steel 01

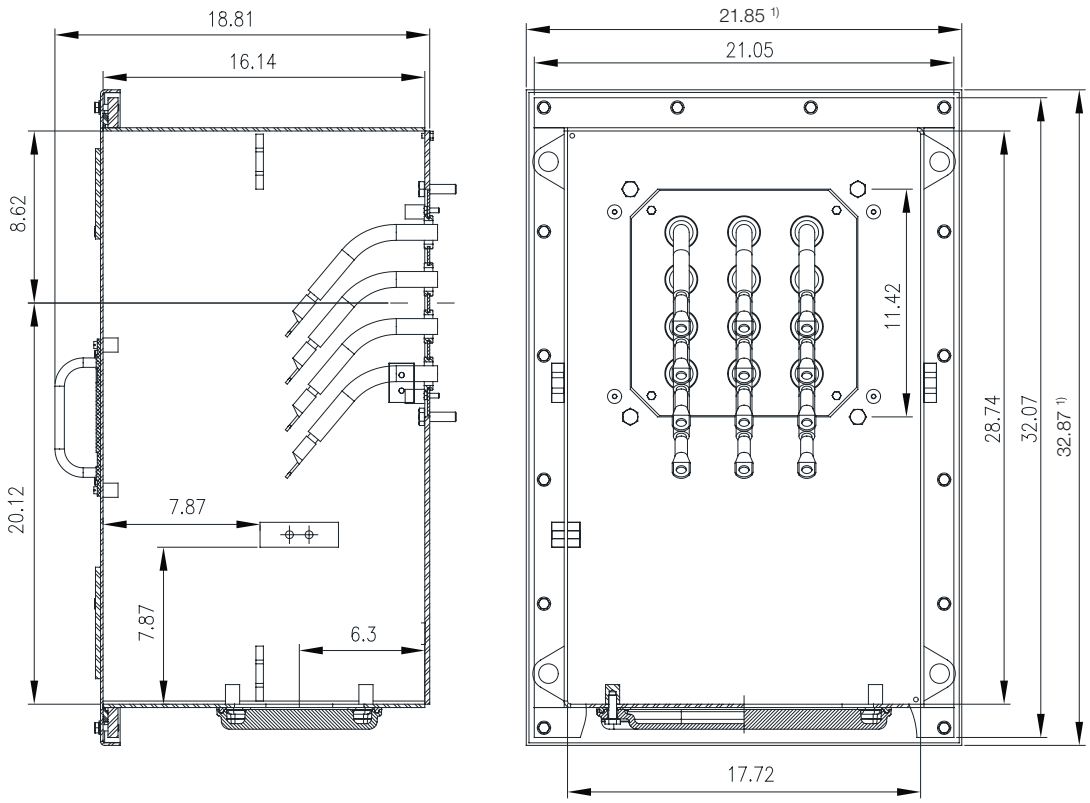

Note: 1) Dimensions of the terminal box cover.

Technical data	
Maximum quantity of leads	4 per phase
Entry plates for leads designation	Type 01
Internal volume	8,226 in³
Grounding terminal	Internal or external
Approximate weight	187.39 lb
Degree of protection	IP66
General data	
Minimum teminal box thickness	0.132 in
Rotate in steps of 90°	Yes
With eyebolts	4 eyebolts

16.2.2 Steel 02

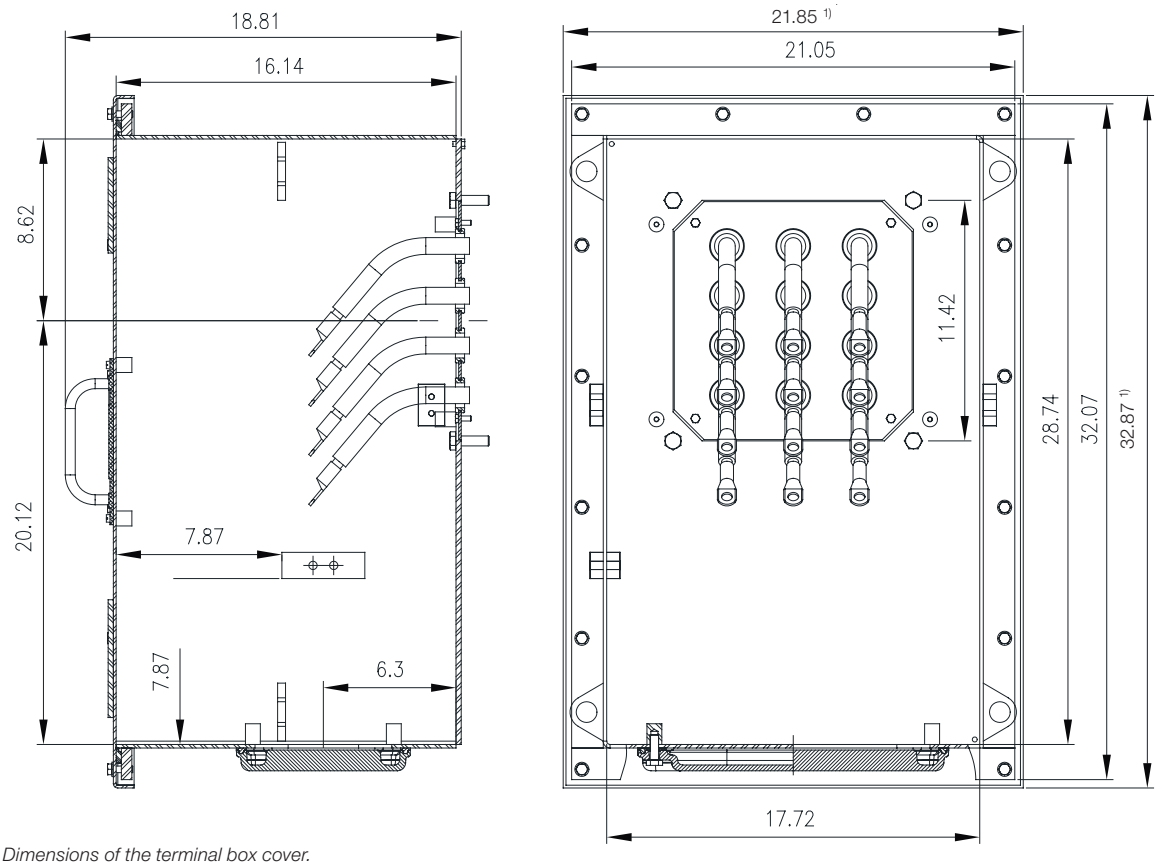

Note: 1) Dimensions of the terminal box cover.

Technical data	
Maximum quantity of leads	4 per phase
Entry plates for leads designation	Type 01
Internal volume	8,226 in³
Grounding terminal	Internal or external
Approximate weight	187.39 lb
Degree of protection	IP66
General data	
Minimum teminal box thickness	0.132 in
With eyebolts	4 eyebolts
Rotate in steps of 90°	Yes
Pressure relief device in the back of the terminal box in case of short circuit	

16. Terminal Boxes

16.2 Steel Plate Terminal Boxes

16.2.3 Steel 03

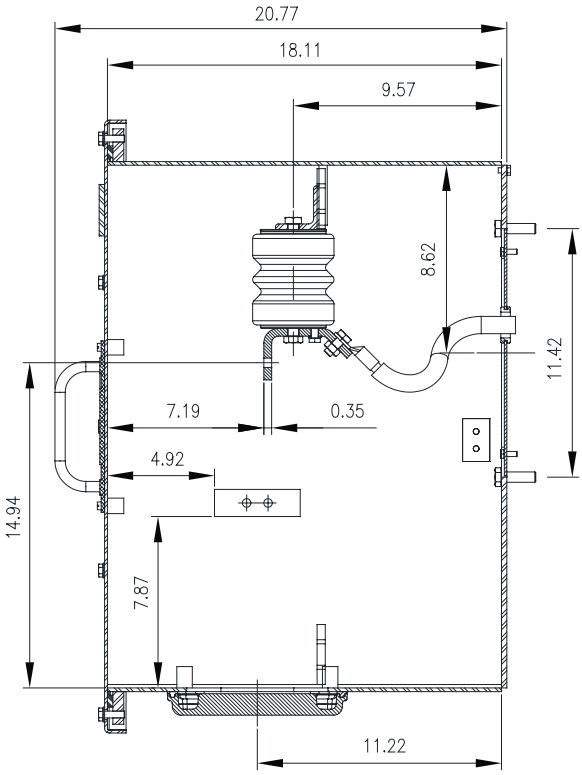

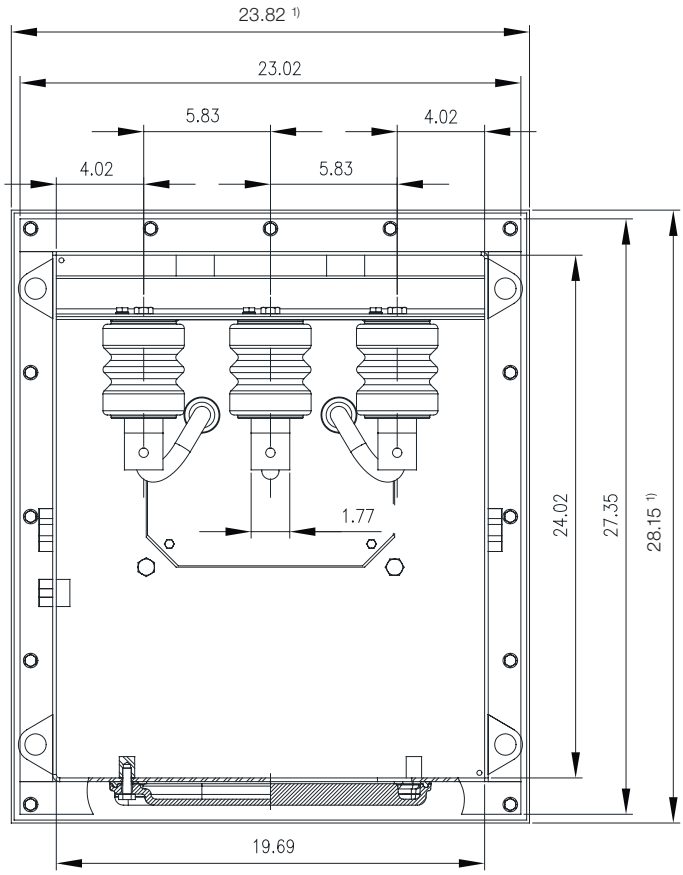

Note: 1) Dimensions of the terminal box cover.

Technical data	
Maximum quantity of leads	1 per phase
Entry plates for leads designation	Type 01
Internal volume	8,439.58 in³
Grounding terminal	Internal or external
Approximate weight	209.44 lb
Degree of protection	IP66
General data	
Minimum teminal box thickness	0.132 in
With eyebolts	4 eyebolts
Rotate in steps of 90°	Yes

16.2.4 Steel 04

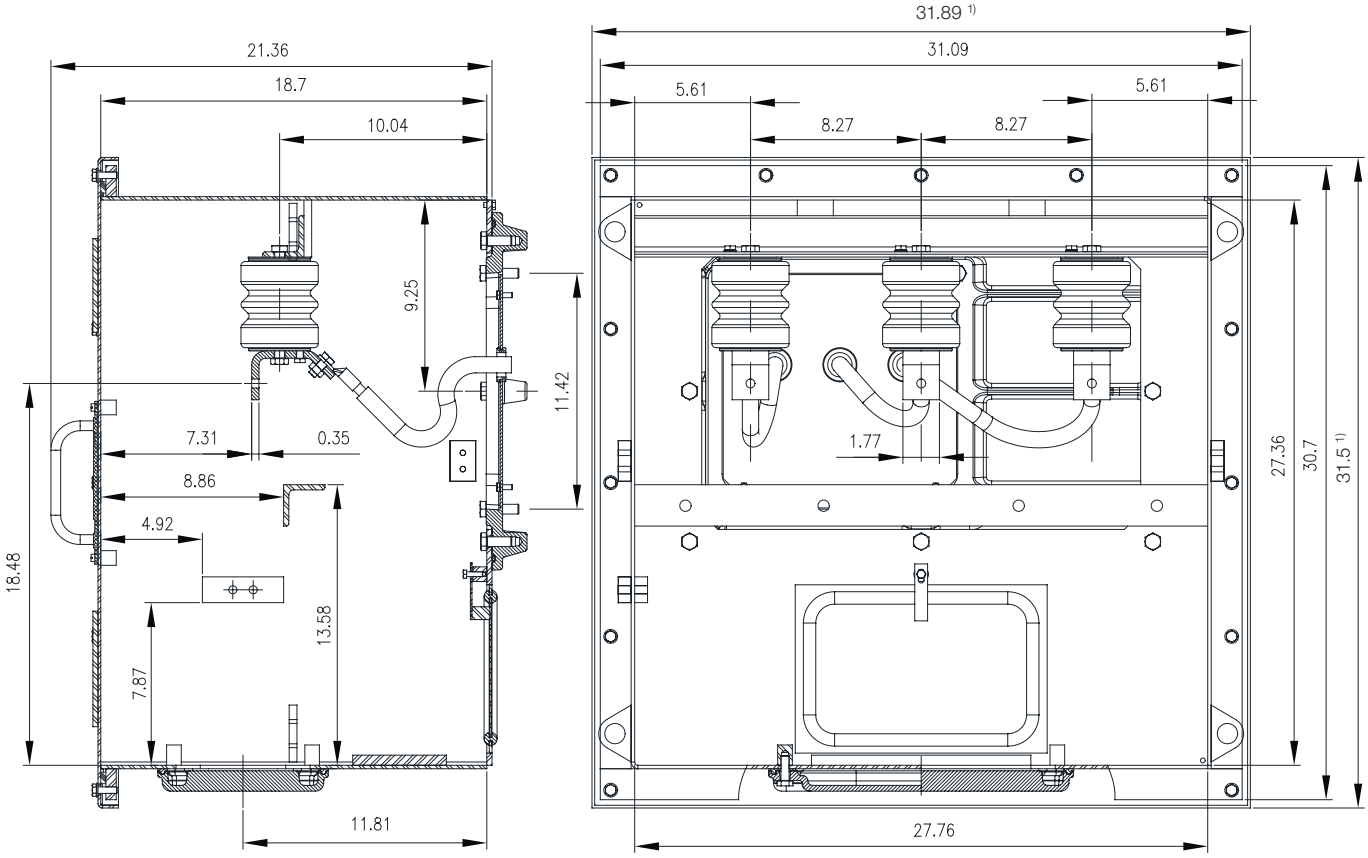

Note: 1) Dimensions of the terminal box cover.

Technical data	
Maximum quantity of leads	1 per phase
Entry plates for leads designation	Type 01
Internal volume	14,157.5 in³
Grounding terminal	Internal or external
Approximate weight	297.62 lb
Degree of protection	IP66
General data	
Minimum teminal box thickness	0.132 in
With eyebolts	4 eyebolts
Rotate in steps of 90°	Yes
Pressure relief device in the back of the terminal box in case of short circuit	

16. Terminal Boxes

16.2 Steel Plate Terminal Boxes

16.2.5 Steel 05

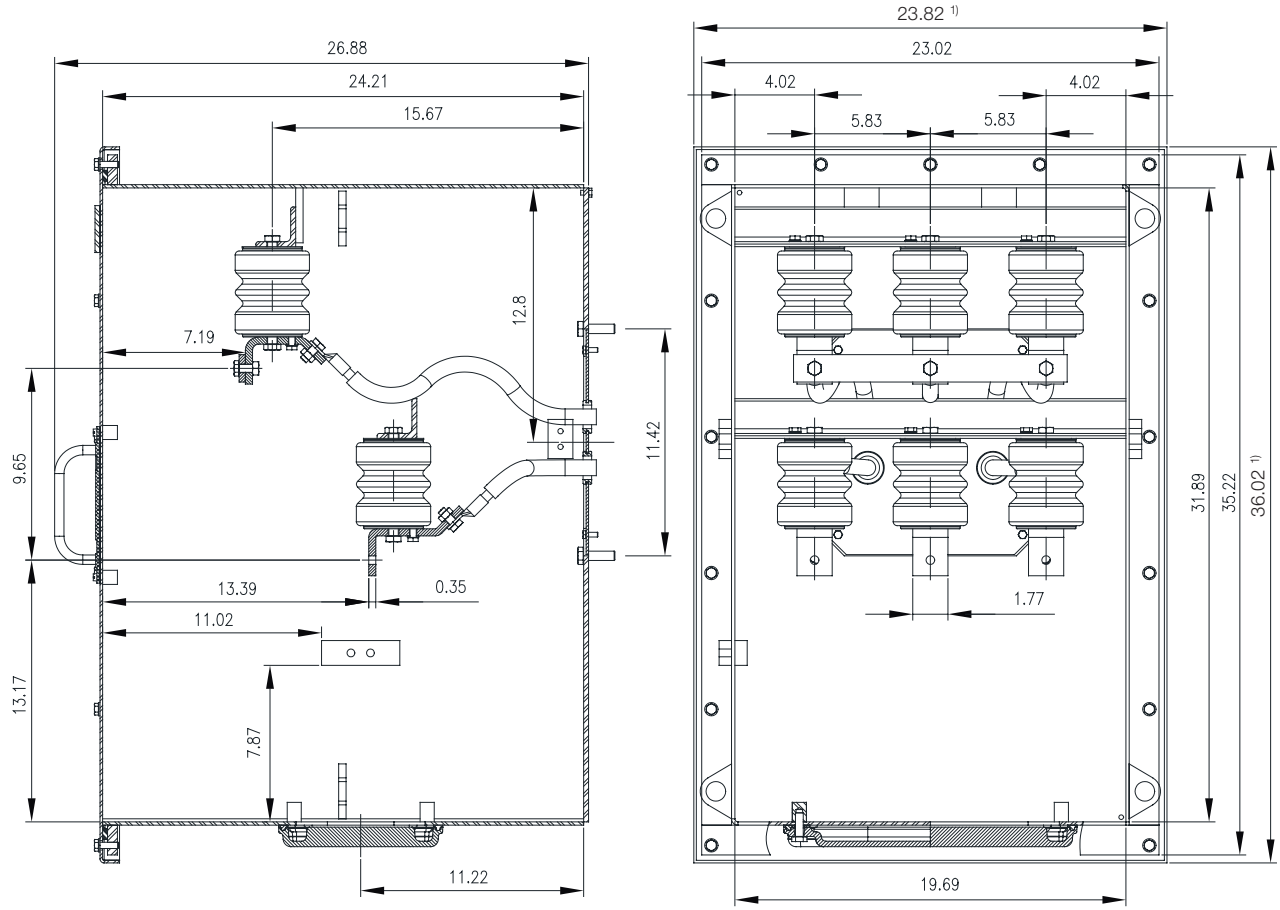

Note: 1) Dimensions of the terminal box cover.

Technical data	
Maximum quantity of leads	2 per phase
Entry plates for leads designation	Type 01
Internal volume	14,834.9 in³
Grounding terminal	Internal or external
Approximate weight	286.6 lb
Degree of protection	IP66
General data	
Minimum teminal box thickness	0.132 in
With eyebolts	4 eyebolts
Rotate in steps of 90°	Yes

16.2.6 Steel 06

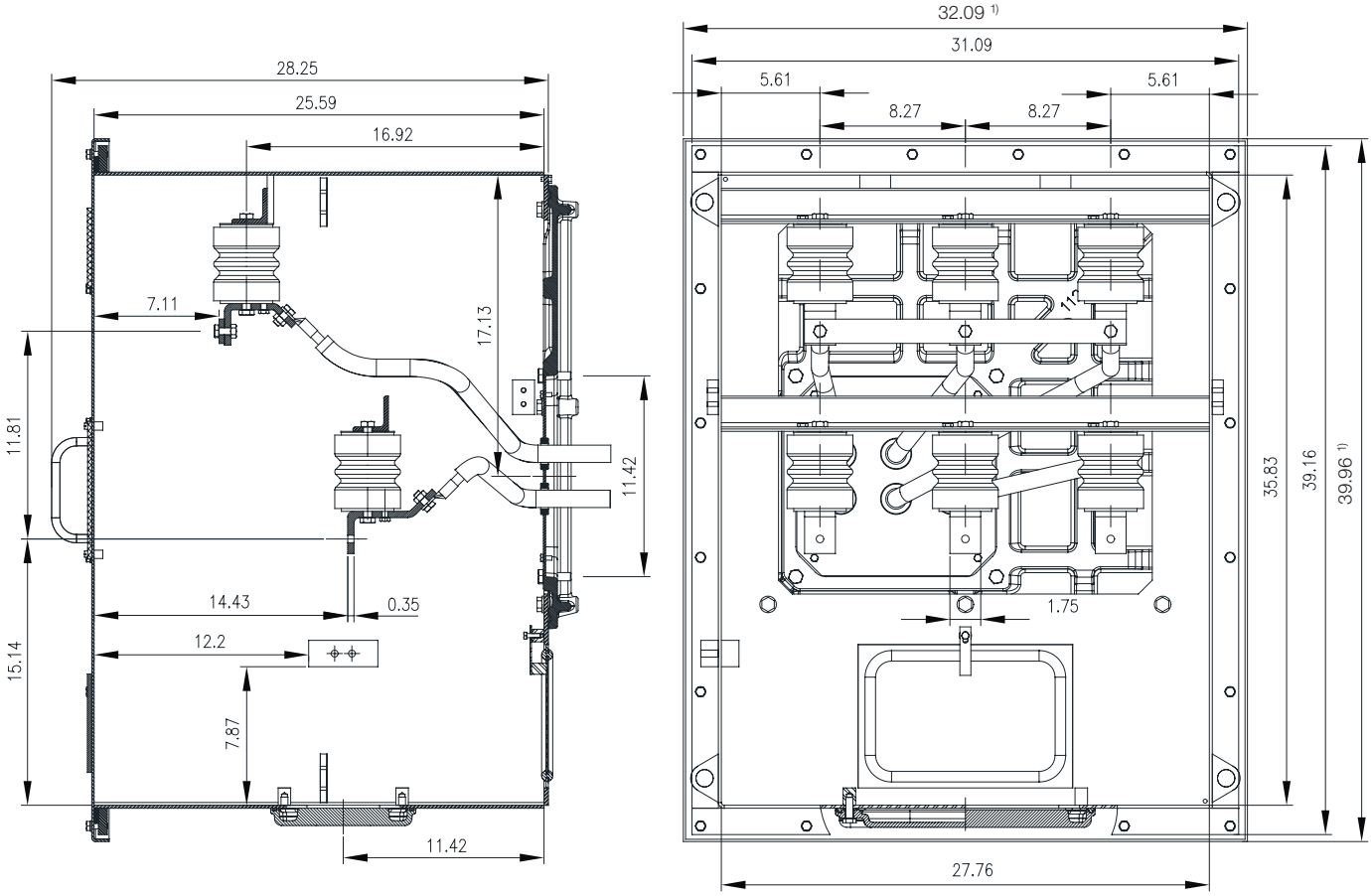

Note: 1) Dimensions of the terminal box cover.

Technical data	
Maximum quantity of leads	2 per phase
Entry plates for leads designation	Type 01
Internal volume	25,446.9 in³
Grounding terminal	Internal or external
Approximate weight	429.9 lb
Degree of protection	IP66
General data	
Minimum teminal box thickness	0.132 in
With eyebolts	4 eyebolts
Rotate in steps of 90°	Yes
Pressure relief device in the back of the terminal box in case of short circuit	

16. Terminal Boxes

16.2 Steel Plate Terminal Boxes

16.2.7 Steel 07

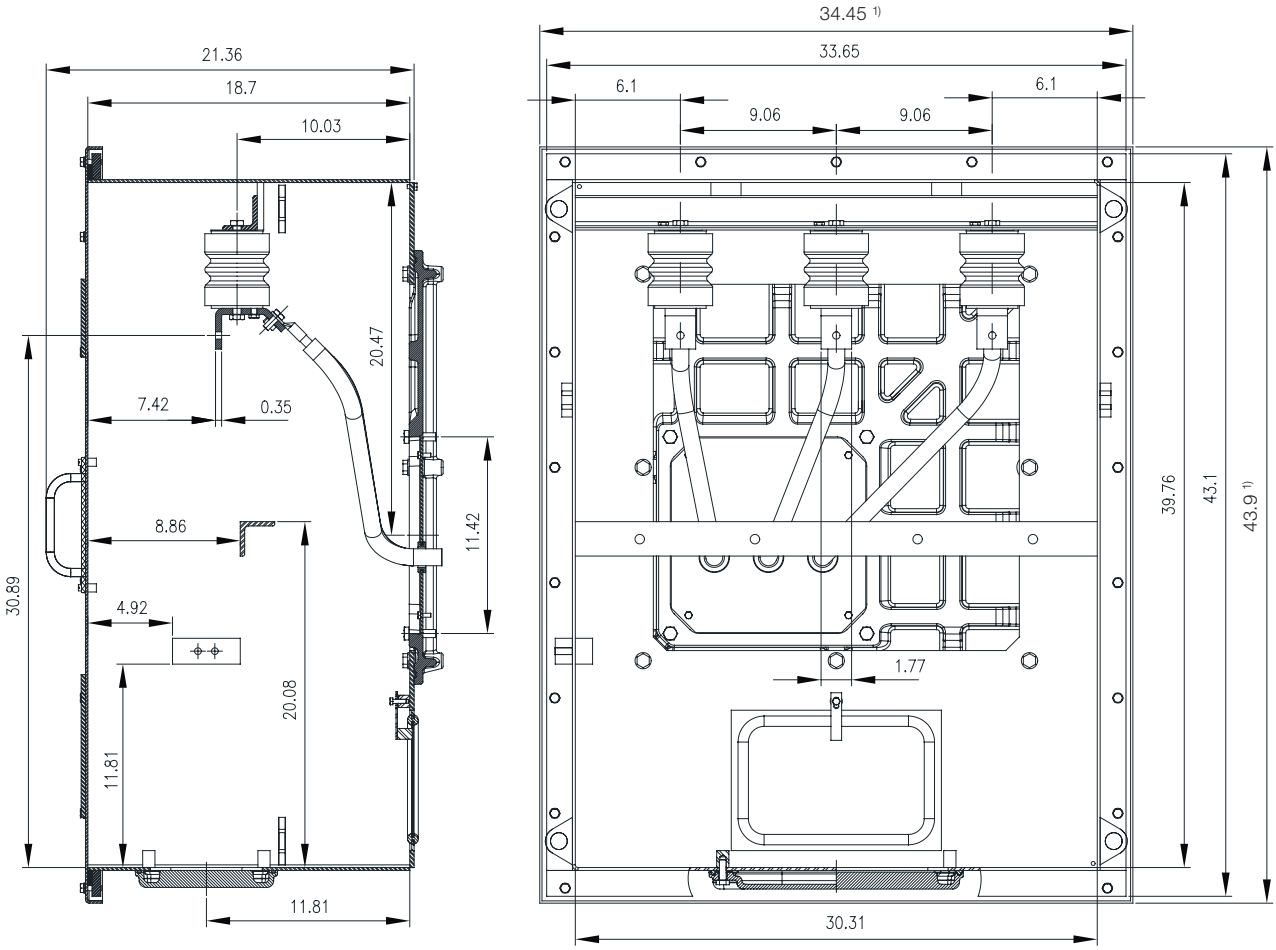

Note: 1) Dimensions of the terminal box cover.

Technical data	
Maximum quantity of leads	1 per phase
Entry plates for leads designation	Type 01
Internal volume	22,517.8 in³
Grounding terminal	Internal or external
Approximate weight	374.8 lb
Degree of protection	IP66
General data	
Minimum teminal box thickness	0.132 in
With eyebolts	4 eyebolts
Rotate in steps of 90°	Yes
Pressure relief device in the back of the terminal box in case of short circuit	

17. Packaging

W50 motors in frames 5009/10 to 6808/09 are packaged in wooden pallets (see figure 58), following the dimensions, weights and volumes opposite.

Frame [1)]	External height (in)	External width (in)	External lenght (in)	Weight (lb)	Volume (in³)
5009/10	9.84	51.97	74.80	225.31	38,261.89
5809/10		53.15	82.68	243.83	1,702.56
6806/07		55.12	86.61	254.63	1,849.02
6808/09					

Note: 1) Applicable for motor with side terminal boxes.

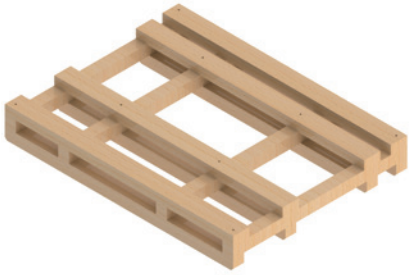

Figure 58 - Wooden pallet.

For frame 7006/07 and 7008/09, the motors are packaged in steel pallets (see figure 59). Dimensions, weights and volumes are in tables opposite.

Frame [1)]	External height (in)	External width (in)	External lenght (in)	Weight (lb)	Volume (in³)
7006/07	9.45	57.09	98.43	216.27	53,090.66
7008/09					

Note: 1) Applicable for motor with side terminal boxes.

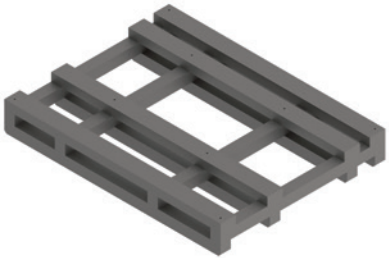

Figure 59 - Steel crates.

18. Spare Parts

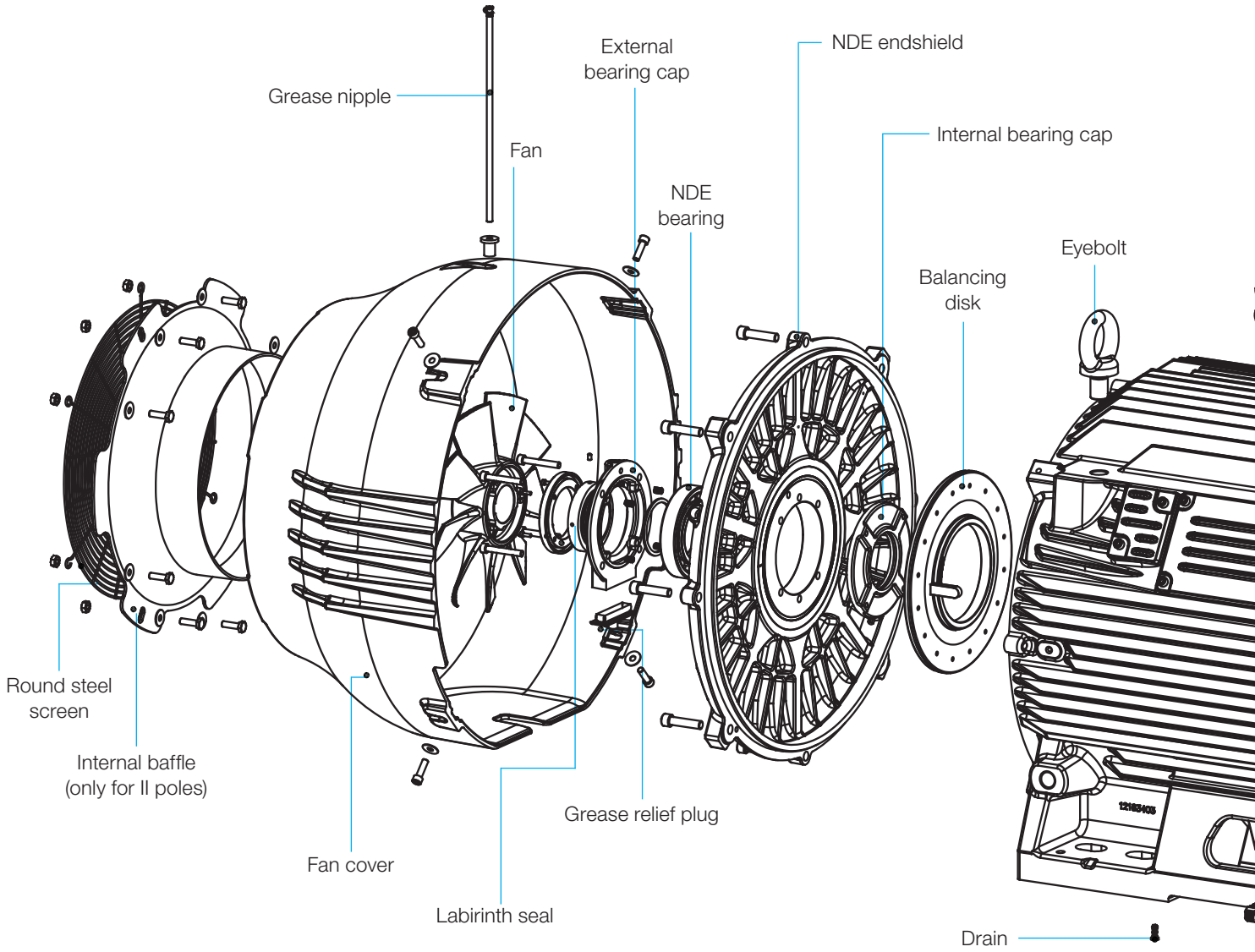

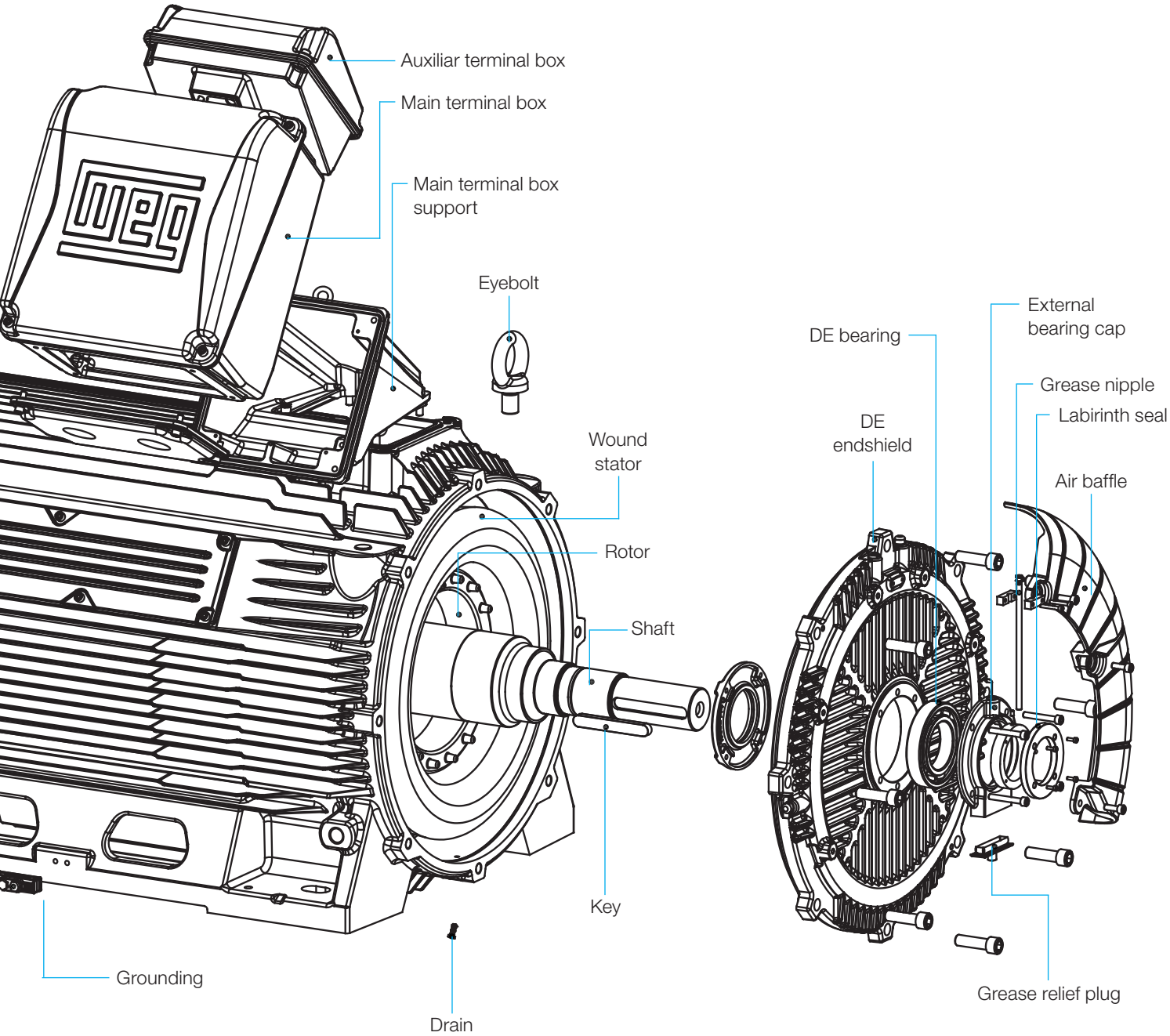
Auxiliar terminal box
Main terminal box
Main terminal box support
Eyebolt
Wound stator
Rotor
Shaft
Key
Grounding
Drain
DE bearing
DE endshield
External bearing cap
Grease nipple
Labirinth seal
Air baffle
Grease relief plug

For WEG's worldwide
operations visit our website

www.weg.net

MOTORS

+55 47 3276.4000

motores@weg.net

Jaraguá do Sul - SC - Brazil

Cod: 50044241 | Rev: 14 | Date (m/a): 02/2021.

The values shown are subject to change without prior notice.
The information contained is reference values.